LAMP CONCEPT
LIGHTING

Collection

STILNOVO

Since 1946, Stilnovo has demonstrated an extraordinary ability to renew itself, adapting to historical and cultural changes. The brand has managed to reinvent itself multiple times, maintaining an offering of lighting products of the highest quality. Thanks to collaborations with the greatest designers, Stilnovo has interpreted and anticipated market trends, always keeping in step with the times across any style. Today as then, Stilnovo has managed to readapt its collection to modern technologies and the dynamic markets of our time. A journey that intertwines new creations with iconic ones, enhancing the nobility of materials and processes. Thanks to its production know-how, Stilnovo fuses craftsmanship and industrialisation, embodies Italian savoir-faire and creates timeless collections capable of entering the most prestigious projects.

Collection

STILNOVO

LAMP-CONCEPT.CH

[IT] Dal 1946, Stilnovo ha dimostrato una straordinaria capacità di rinnovamento, adattandosi ai cambiamenti storici e culturali. Il brand ha saputo reinventarsi più volte, mantenendo un'offerta di prodotti di illuminazione di altissima qualità. Grazie alle collaborazioni con i più grandi designer, Stilnovo ha interpretato e anticipato le tendenze del mercato, rimanendo sempre al passo con i tempi e trasversale agli stili.
Oggi come allora, Stilnovo ha saputo riadattare la propria collezione alle odierne tecnologie e ai mercati dinamici del nostro tempo. Un percorso che intreccia le nuove creazioni con quelle iconiche e che esalta la nobiltà dei materiali e delle lavorazioni. Stilnovo grazie al suo know-how produttivo fonde artigianalità e industrializzazione, incarna il savoir-faire italiano e dà vita a collezioni senza tempo capaci di entrare nei progetti più prestigiosi.

[FR] Depuis 1946, Stilnovo a démontré une capacité extraordinaire de renouvellement, en s'adaptant aux changements historiques et culturels. La marque a su se réinventer à plusieurs reprises tout en maintenant une offre de produits d'éclairage de très haute qualité. Grâce à ses collaborations avec les plus grands designers, Stilnovo a su interpréter et anticiper les tendances du marché, en restant toujours à la pointe et transversal aux styles.
Aujourd'hui comme autrefois, Stilnovo a su adapter sa collection aux technologies actuelles et aux marchés dynamiques de notre époque. Un parcours qui mêle créations nouvelles et pièces iconiques, mettant en valeur la noblesse des matériaux et du savoir-faire. Grâce à son savoir-faire de production, Stilnovo allie artisanat et industrialisation, incarne le savoir-faire italien et donne vie à des collections intemporelles capables d'intégrer les projets les plus prestigieux.

[DE] Seit 1946 beweist Stilnovo eine außergewöhnliche Fähigkeit zur Erneuerung und passt sich historischen und kulturellen Veränderungen an. Die Marke hat sich mehrfach neu erfunden und dabei stets ein Angebot an hochwertigen Beleuchtungsprodukten beibehalten. Dank der Zusammenarbeit mit den größten Designern hat Stilnovo Markttrends interpretiert und vorweggenommen, stets am Puls der Zeit und stilübergreifend. Heute wie damals versteht es Stilnovo, seine Kollektion an moderne Technologien und die dynamischen Märkte unserer Zeit anzupassen. Ein Weg, der neue Kreationen mit ikonischen verbindet und die Wertigkeit von Materialien und Verarbeitung hervorhebt. Dank seines Produktions-Know-hows vereint Stilnovo Handwerkskunst und Industrialisierung, verkörpert italienisches Savoir-faire und schafft zeitlose Kollektionen, die in den prestigeträchtigsten Projekten ihren Platz finden.

[ES] Desde 1946, Stilnovo ha demostrado una extraordinaria capacidad de renovación, adaptándose a los cambios históricos y culturales. La marca ha sabido reinventarse en varias ocasiones, manteniendo una oferta de productos de iluminación de altísima calidad. Gracias a las colaboraciones con los más grandes diseñadores, Stilnovo ha interpretado y anticipado las tendencias del mercado, manteniéndose siempre al día y siendo transversal a los estilos. Hoy como ayer, Stilnovo ha sabido readaptar su colección a las tecnologías actuales y a los mercados dinámicos de nuestro tiempo. Un recorrido que entrelaza nuevas creaciones con piezas icónicas y que exalta la nobleza de los materiales y de los procesos artesanales. Gracias a su saber hacer productivo, Stilnovo fusiona la artesanía con la industrialización, encarna el savoir-faire italiano y da vida a colecciones atemporales capaces de formar parte de los proyectos más prestigiosos.

LAMP-CONCEPT.CH



Stilnovo

From the heart of the 20th century to today, Stilnovo has collaborated with the greatest masters of design, creating pieces that have defined an era. Visionaries, innovators, true artists of form and light: Stilnovo designers have redefined the aesthetics of living, transforming each lamp into a timeless work of art.

Danilo and Corrado Aroldi
Shigeaki Asahara
Gae Aulenti
Paolo Cappello
Achille and Pier Giacomo Castiglioni
Livio Castiglioni
Piero Castiglioni
Giuseppe Maurizio Scutellà
Joe Colombo
Mirco Crosatto
Jonathan De Pas
Donato D'Urbino
Paolo Lomazzi
Giovanni Luigi Gorgoni
Antonio Macchi Cassia
Davide Oppizzi
Richard Sapper
Brian Sironi
Studio Nizzoli Associati
Ettore Sottsass
Pio and Tito Toso

IT Dal cuore del Novecento fino ai giorni nostri, Stilnovo ha collaborato con i più grandi maestri del design, dando vita a creazioni che hanno segnato un'epoca. Visionari, innovatori, autentici artisti della forma e della luce: i designer di Stilnovo hanno ridefinito l'estetica del vivere, trasformando ogni lampada in un'opera d'arte senza tempo.

FR Du cœur du XXe siècle à aujourd'hui, Stilnovo a collaboré avec les plus grands maîtres du design, donnant naissance à des créations qui ont marqué une époque. Visionnaires, innovateurs, véritables artistes de la forme et de la lumière : les designers de Stilnovo ont redéfini l'esthétique du quotidien, transformant chaque lampe en une œuvre d'art intemporelle.

DE Vom Herzen des 20. Jahrhunderts bis heute hat Stilnovo mit den größten Meistern des Designs zusammengearbeitet und Kreationen geschaffen, die eine Ära geprägt haben. Visionäre, Innovatoren, wahre Künstler der Form und des Lichts: Die Designer von Stilnovo haben die Ästhetik des Wohnens neu definiert und jede Lampe in ein zeitloses Kunstwerk verwandelt.

ES Desde el corazón del siglo XX hasta hoy, Stilnovo ha colaborado con los más grandes maestros del diseño, dando vida a creaciones que han marcado una época. Visionarios, innovadores, auténticos artistas de la forma y la luz: los diseñadores de Stilnovo han redefinido la estética del vivir, transformando cada lámpara en una obra de arte atemporal.

Danilo & Corrado Aroldi **Periscopio**
Shigeaki Asahara **Bascula - Luna - Torino**
Gae Aulenti **Gomito / Colonna - Minibox - Trepiù**
Paolo Cappello **Nido**
Achille & Pier Giacomo Castiglioni **Saliscendi**
Livio Castiglioni **Trepiù**
Piero Castiglioni **Minibox**
Joe Colombo **Topo / Minitopo - Triedro**
Mirco Crosatto **Demì / Demì Moon - Diphy - La Mariée - Mr Magoo - Reflexio - Tablet**
Jonathan De Pas, Donato D'Urbino, Paolo Lomazzi **Fante - Lampiatta**
Edin Dedovic **Kimia - Xilema**
Giovanni Luigi Gorgoni **Buonanotte**
Antonio Macchi Cassia **Bugia - Gravita - Gravitino 541**
Davide Oppizzi **1Night / 2Nights**
Richard Sapper **Halley**
Giuseppe Maurizio Scutellà **Papylia**
Brian Sironi **Inbilico**
Studio Nizzoli Associati **Goletta**
Ettore Sottsass **Valigia**
Stilnovo **Campana - Cono - Dynamic - Galassia - Megafono - Mongolfier - Opti-Line - Sputnik**
Pio & Tito Toso **Fronda - Honey - Oxygen - Quad**

Compasso d'oro, Honourable Mention 2018 Diphy
ADI Design Index 2022 Saliscendi
Good Design Award, Winner 2023 Halley
iF Product Design Award, Winner 2018 Reflexio
Red Dot Design Award, Winner 2011 Lama, 2015 Mr Magoo, 2016 2Nights, 2017 Oxygen, 2017 Diphy, 2018 Tablet Floor, 2019 Demì

Collection	Gallery	Specs	Pendant	Wall / Ceiling	Table	Floor
Bascula	p. 18	p. 330	●			
Bugia	p. 22	p. 332		●	●	
Buonanotte	p. 28	p. 334			●	
Campana	p. 34	p. 336	●			
Cono	p. 40	p. 338	●	●		
Demì / Demì Moon	p. 52	p. 342	●	●		●
Diphy	p. 62	p. 346	●	●		●
Dynamic	p. 70	p. 350		●		
Fante	p. 74	p. 352		●	●	
Fronda	p. 78	p. 354	●	●		
Galassia	p. 86	p. 358	●	●		●
Goletta	p. 96	p. 362		●		
Gomito / Colonna	p. 100	p. 364	●	●		●
Gravita	p. 110	p. 368			●	
Gravitino 541	p. 116	p. 370		●	●	
Halley	p. 122	p. 372			●	
Honey	p. 130	p. 374	●	●		
Inbilico	p. 140	p. 378		●		
Kimia	p. 144	p. 380	●	●		●
La Mariée	p. 156	p. 384	●		●	
Lampiatta	p. 160	p. 386	●	●	●	
Luna	p. 168	p. 388	●			●
Megafono	p. 176	p. 390	●	●	●	
Meta	p. 186	p. 394			●	
Minibox	p. 196	p. 396		●	●	
Mongolfier	p. 202	p. 398	●			
Mr Magoo	p. 206	p. 400	●	●		●
Nido	p. 214	p. 406	●	●		●
Opti-line	p. 228	p. 410	●			
Oxygen	p. 232	p. 412	●	●		●
Papylia	p. 238	p. 416	●	●	●	●
Periscopio	p. 252	p. 422			●	●
Quad	p. 258	p. 424		●		
Reflexio	p. 262	p. 426	●	●		
Saliscendi	p. 266	p. 428	●			
Sputnik	p. 274	p. 430	●			
Tablet	p. 280	p. 432	●	●		●
Topo / Minitopo	p. 286	p. 436			●	●
Torino	p. 296	p. 440		●	●	
Trepiù	p. 306	p. 444	●			
Triedro	p. 310	p. 446	●	●		●
Valigia	p. 318	p. 450			●	
Xilema	p. 322	p. 452		●		
1Night / 2Nights	p. 324	p. 454		●		


Bascula 18


Campana 34


Colonna 100


Cono 40


Demì 52


Diphy 62


Fronda 78

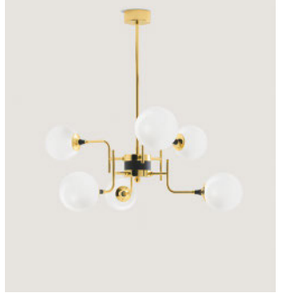
Galassia 86


Honey 130


Kimia 144


La Mariée 156


Lampiatta 160

Pendant


Luna 168


Megafono 176

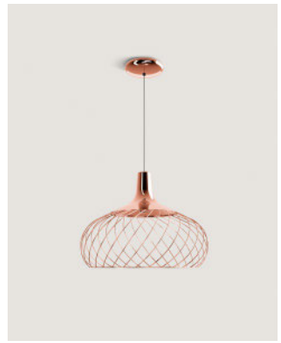
Mongolfier 202


Mr Magoo 206


Nido 214


Opti-line 228

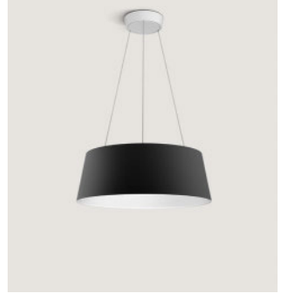
Oxygen 232


Papylia 238


Reflexio 262


Saliscendi 266

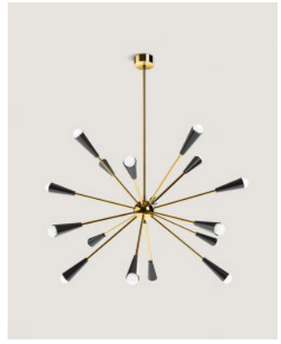
Sputnik 274


Tablet 280

Pendant


Trepiù 306


Triedro 310

Wall / Ceiling


Bugia 22


Colonna 100


Cono 40


Demì 52


Diphy 62


Dynamic 70

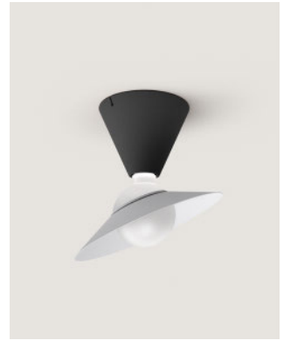
Fante 74


Fronda 78


Galassia 86

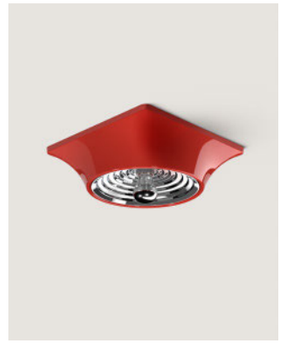
Goletta 96


Gomito 100

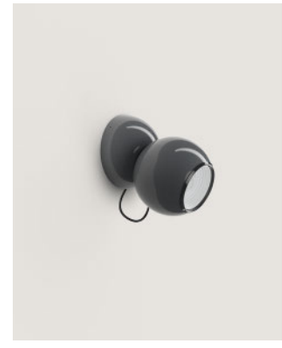
Gravitino 541 116


Honey 130


Inbilico 140


Kimia 144


Kimia 144


Lampiatta 160

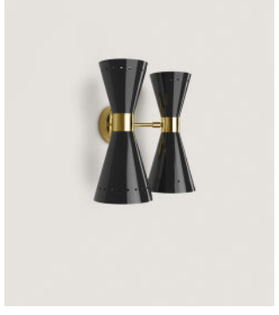
Megafono 176


Minibox 196


Mr Magoo 206


Nido 214


Oxygen 232


Papylia 238

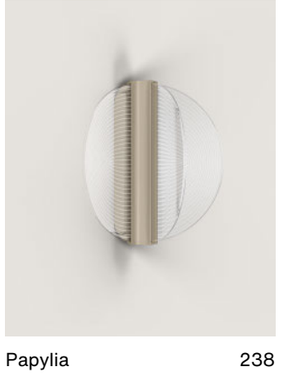
Papylia 238


Quad 258


Reflexio 262


Tablet 280


Torino 296

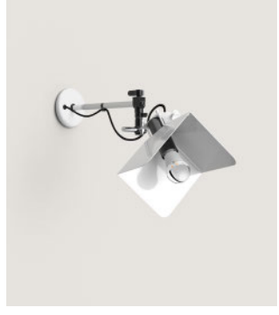
Triedro 310


Xilema 322

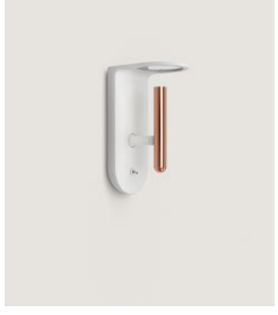
1Night / 2Nights 324

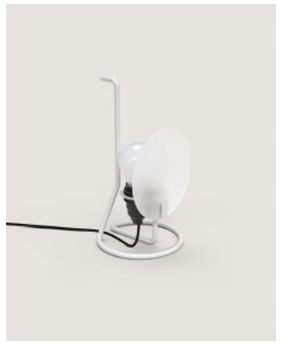
Bugia 22

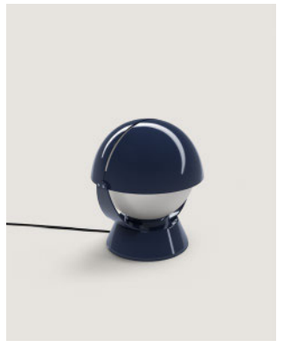
Buonanotte 28


Fante 74

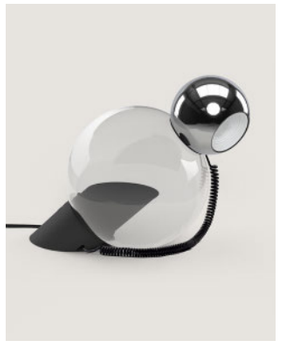
Gravita 110

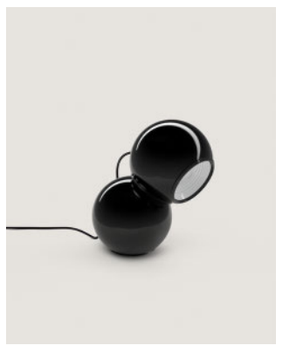
Gravitino 541 116

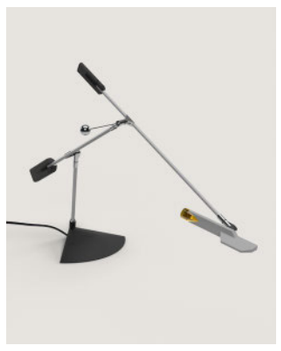
Halley 122


La Mariée 156

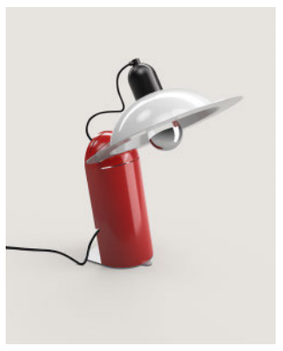
Lampiatta 160


Megafono 176

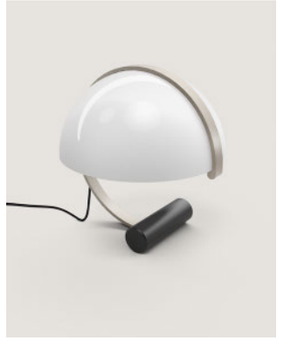
Meta 186


Minibox 196

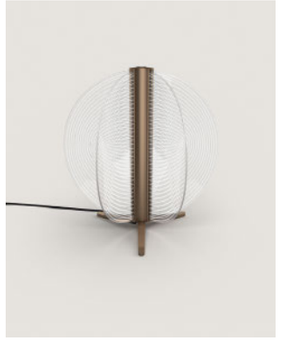
Papylia 238


Periscopio 252


Minitopo 286


Topo 286


Torino 296


Valigia 318


Colonna 100


Demì Moon 52


Diphy 62

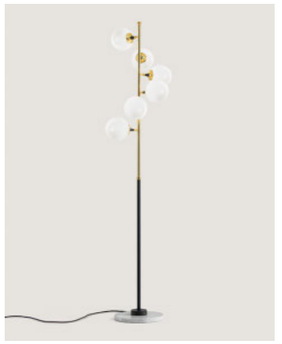
Galassia 86


Kimia 144


Luna 168


Mr Magoo 206


Nido 214


Oxygen 232


Oxygen 232


Papylia 238


Papylia 238


Periscopio 252


Tablet 280


Topo 286


Triedro 310

Bascula **Designed by Shigeaki Asahara** **1985**

Freely inspired by the Starship Enterprise from the Star Trek TV series, Bascula is an icon of lightness and innovation. One of the first thin-disc lamps suspended on a single cable, its minimalist design conceals a sophisticated balance system.
Glass diffuser, aluminium heat sink, metal counterweight.

Technical Specification **Page 330** **Download**

IT Liberamente ispirata all'astronave Enterprise della serie TV Star Trek, Bascula è un'icona di leggerezza e innovazione. Tra le prime lampade a disco sottile sospese su un unico cavo, il suo design minimalista cela un sofisticato studio dell'equilibrio.
Diffusore in vetro, dissipatore in alluminio, contrappeso in metallo.

FR Librement inspirée du vaisseau Enterprise de la série TV Star Trek, Bascula est une icône de légèreté et d'innovation. Parmi les premières lampes à disque fin suspendues par un seul câble, son design minimaliste dissimule un équilibre sophistiqué.
Diffuseur en verre, dissipateur en aluminium, contrepoids en métal.

DE Inspiriert vom Raumschiff Enterprise aus der TV-Serie Star Trek, ist Bascula ein Symbol für Leichtigkeit und Innovation. Eine der ersten dünnen Scheibenlampen, die an einem einzigen Kabel hängt, verbindet sie minimalistisches Design mit einem ausgeklügelten Balance-System. Diffusor aus Glas, Kühlkörper aus Aluminium, Gegengewicht aus Metall.

ES Inspirada libremente en la nave Enterprise de la serie Star Trek, Bascula es un icono de ligereza e innovación. Una de las primeras lámparas de disco delgado suspendidas en un solo cable, su diseño minimalista oculta un sofisticado estudio del equilibrio.
Difusor de vidrio, disipador en aluminio, contrapeso en metal.



CZ001CKWMDD - Bascula, Pendant



CZ001CKGWDD - Bascula, Pendant

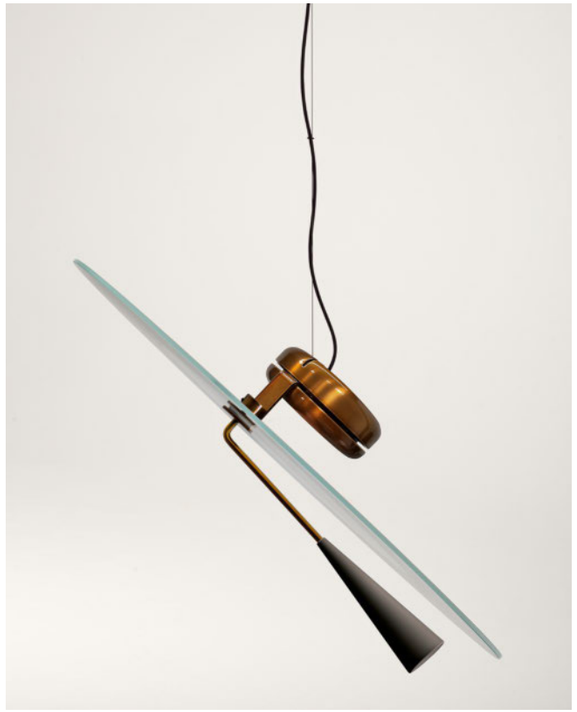

CZ001CHZWDD - Bascula, Pendant



CZ001CKWMDD - Bascula, Pendant

Evoking the timeless charm of antique candles, the Bugia lamp by Stilnovo elegantly and innovatively reinterprets the classic candle holder with a handle. It blends tradition and modernity, transforming an iconic object into a refined lighting piece. Structure in glossy painted metal, satin glass diffuser.



9693 - Bugia, Wall

Technical Specification Page 332 Download

IT Evocando il fascino senza tempo delle antiche candele, la lampada Bugia di Stilnovo reinterpreta con eleganza e innovazione il classico portacandela con manico. Trasformando un oggetto iconico in un pezzo di illuminazione dal carattere raffinato.
Struttura in metallo verniciato lucido, diffusore in vetro satinato.

FR Évoquant le charme intemporel des bougies anciennes, la lampe Bugia de Stilnovo réinterprète avec élégance et innovation le classique bougeoir à anse. Elle allie tradition et modernité, transformant un objet iconique en une pièce d'éclairage raffinée.
Structure en métal peint poli, diffuseur en verre satiné.

DE Die zeitlose Eleganz antiker Kerzenhalter aufgreifend, interpretiert die Bugia-Lampe von Stilnovo den klassischen Kerzenständer mit Griff auf elegante und innovative Weise neu. Verbindet sie Tradition mit Moderne und verwandelt ein ikonisches Objekt in eine stilvolle Lichtquelle.
Gestell aus glänzend lackiertem Metall, Diffusor aus satiniertem Glas.

ES Emanando el encanto atemporal de los antiguos candelabros, la lámpara Bugia de Stilnovo reinterpreta con elegancia e innovación el clásico portavelas con asa. Combina tradición y modernidad, transformando un objeto icónico en una pieza de iluminación sofisticada.
Estructura de metal pintado brillante, difusor de vidrio satinado.



9693 - Bugia, Wall



9687 - Bugia, Wall



9695 - Bugia, Wall

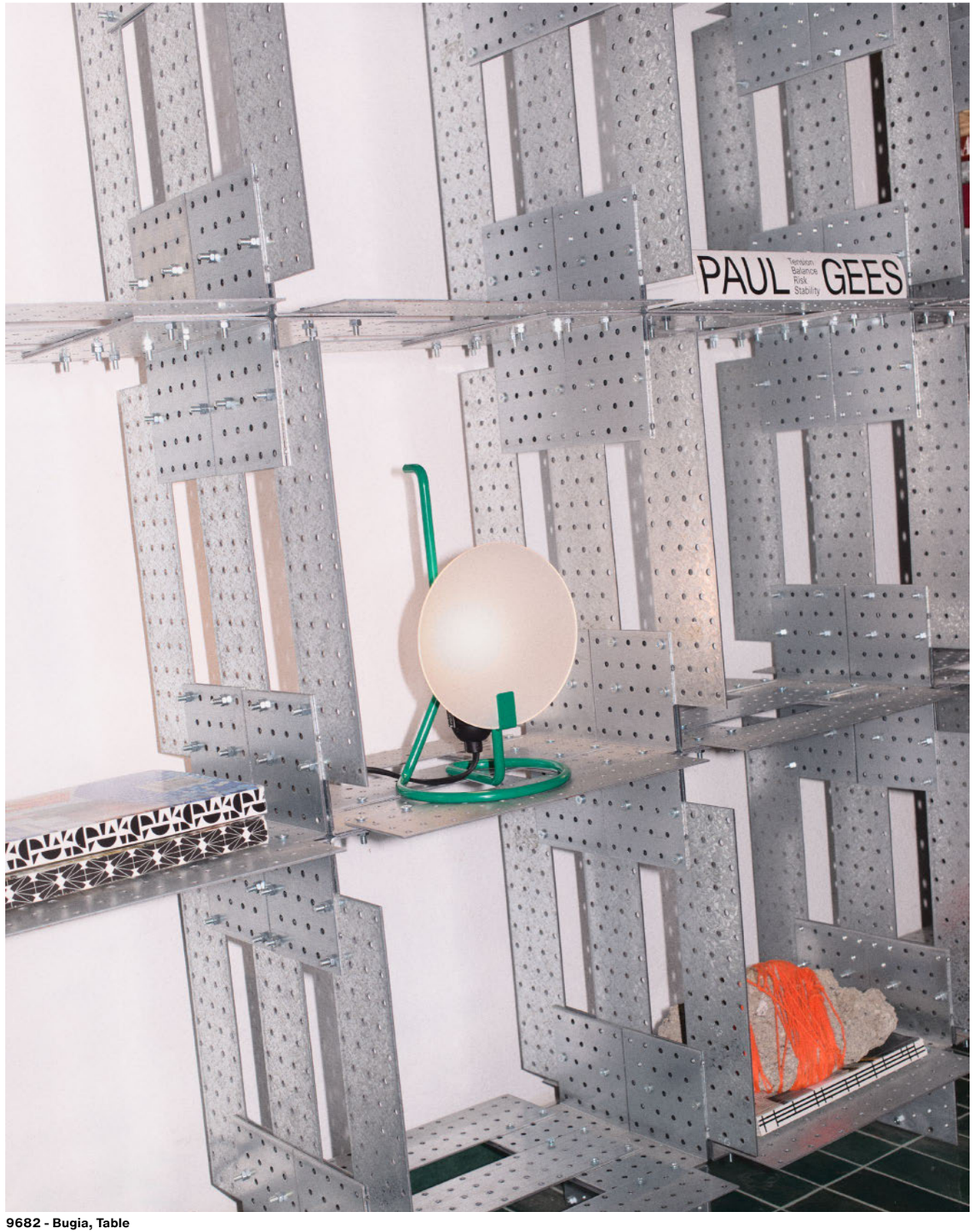

9682 - Bugia, Table

Buonanotte **Designed by Giovanni Luigi Gorgoni** **1965**

Buonanotte is a lamp with a playful and innovative approach, allowing you to adjust the intensity of the light with a simple gesture. The two metal quarter-panels, adjustable as desired above the spherical diffuser, direct the light beam.
Structure in glossy painted metal, triplex glass diffuser.

Technical Specification **Page 334** **Download**

**IT Buonanotte è una lampada dall'approccio giocoso e innovativo, che permette di modulare l'intensità della luce con un semplice gesto.
Le due quartine in metallo, regolabili a piacere sopra al diffusore sferico, orientano il fascio luminoso.
Struttura in metallo verniciato lucido, diffusore in vetro triplex.**

**FR Buonanotte est une lampe avec une approche ludique et innovante, permettant de moduler l'intensité de la lumière d'un simple geste.
Les deux quartines en métal, réglables à volonté au-dessus du diffuseur sphérique, orientent le faisceau lumineux.
Structure en métal peint poli, diffuseur en verre triplex.**

**DE Buonanotte ist eine Lampe mit einem verspielten Ansatz, die es ermöglicht, die Lichtintensität mit einer einfachen Geste zu verändern.
Die beiden verstellbaren Metall-Viertelplatten, die nach Belieben über dem kugelförmigen Diffusor verstellbar sind, richten den Lichtstrahl aus. Gestell aus glänzend lackiertem Metall, Diffusor aus Triplex-Glas.**

**ES Buonanotte es una lámpara con un enfoque juguetón e innovador, que permite modular la intensidad de la luz con un simple gesto.
Las dos cuartinas de metal, ajustables a voluntad sobre el difusor esférico, orientan el haz de luz.
Estructura de metal pintado brillante, difusor de vidrio triplex.**



8961 - Buonanotte, Table



8961 - Buonanotte, Table



8962 - Buonanotte, Table

8962 - Buonanotte, Table



8961, 8962, 8963, 8964 - Buonanotte, Table

Campana **Designed by Stilnovo** **1969**

Campana preserves its distinctive aesthetic and the charm of a design that has transcended generations. The light emitted by the new LED source illuminates the space below and the lamp's silhouette itself, ensuring a scenic presence that never ceases to amaze. Aluminium body and lampshade.

Technical Specification **Page 336** **Download**

IT Campana conserva la sua estetica distintiva e il fascino di un design che ha saputo attraversare le generazioni. La luce emessa dalla nuova sorgente LED illumina l'ambiente sottostante e la silhouette stessa della lampada, garantendo una presenza scenica che non smette mai di sorprendere. Calotta e paralume in alluminio.

FR Campana conserve son esthétique singulière et le charme d'un design qui a traversé les générations. La lumière émise par la nouvelle source LED éclaire l'espace en dessous ainsi que la silhouette même de la lampe, garantissant une présence scénique qui ne cesse jamais d'étonner. Coque et abat-jour en aluminium.

DE Campana bewahrt sie ihre unverwechselbare Ästhetik und den Charme eines Designs, das Generationen überdauert hat. Das von der neuen LED-Lichtquelle abgegebene Licht erhellt den darunterliegenden Bereich und die Silhouette der Leuchte selbst und sorgt so für eine szenische Präsenz, die immer wieder überrascht. Kappe und Lampenschirm aus Aluminium.

ES Campana conserva su estética distintiva y el encanto de un diseño que ha trascendido generaciones. La luz emitida por la nueva fuente LED ilumina el espacio inferior y la propia silueta de la lámpara, garantizando una presencia escénica que nunca deja de sorprender. Carcasa y pantalla en aluminio.



9302 - Campana, Pendant



9302 - Campana, Pendant



9302 - Campana, Pendant



9300 - Campana, Pendant



9301 - Campana, Pendant

Cono **Designed by Stilnovo** **1950s, 2026 re-edition**

The Cono collection expresses light through essential forms and noble materials, reinterpreting the iconic 1950s model and bringing timeless character to contemporary spaces. A scenic presence that unites function and beauty, in the spirit of everyday design. Aluminium body, concave triplex glass diffuser.

Technical Specification **Page 338** **Download**

IT La collezione Cono esprime la luce attraverso forme essenziali e materiali nobili, reinterpretando l'iconico modello degli anni '50 e portando un carattere senza tempo negli spazi contemporanei. Una presenza scenica che unisce funzione e bellezza, nello spirito del design quotidiano. Corpo in alluminio, diffusore in vetro concavo triplex.

FR La collection Cono exprime la lumière à travers des formes essentielles et des matériaux nobles, en réinterprétant le modèle iconique des années 50 et en apportant un caractère intemporel aux espaces contemporains. Une présence scénique qui unit fonction et beauté, dans l'esprit du design au quotidien. Corps en aluminium, diffuseur en verre concave triplex.

DE Die Cono-Kollektion bringt Licht durch klare Formen und edle Materialien zum Ausdruck, indem sie das ikonische Modell der 50er-Jahre neu interpretiert und zeitlosen Charakter in moderne Räume bringt. Eine eindrucksvolle Präsenz, die Funktion und Schönheit im Geist des alltäglichen Designs vereint. Korpus aus Aluminium, Diffusor aus konkaves Triplex-Glas.

ES La colección Cono expresa la luz a través de formas esenciales y materiales nobles, reinterpretando el icónico modelo de los años 50 y aportando un carácter atemporal a los espacios contemporáneos. Una presencia escénica que une función y belleza, en el espíritu del diseño cotidiano. Cuerpo de aluminio, difusor de vidrio cóncavo tríplex.



CZ150DVBMDI - Cono, Pendant

CZ150DVBMDI - Cono, Pendant





CZ142DVDMDI - Cono, Wall

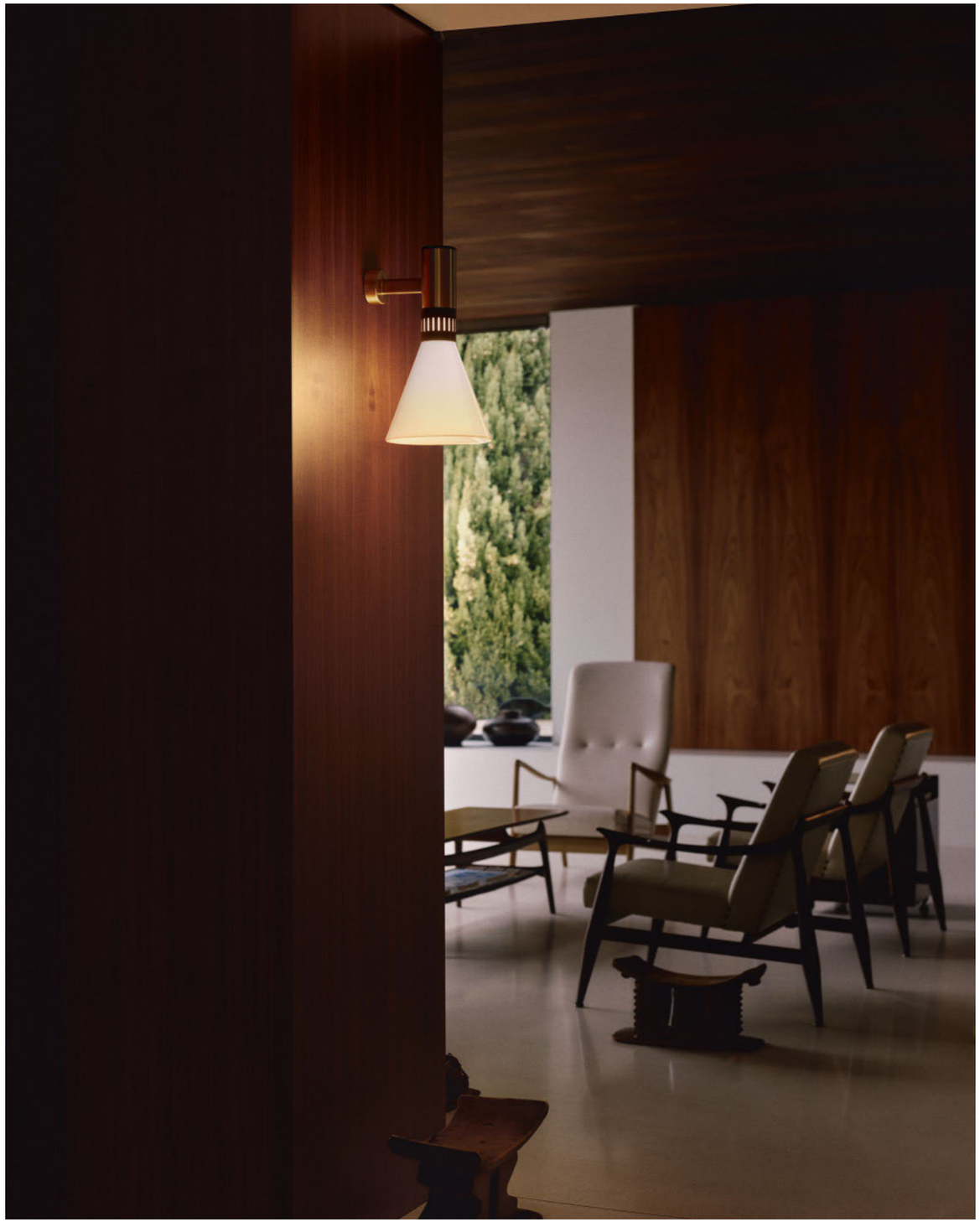

CZ142DVDMDI - Cono, Wall



CZ146DWWMDI + C-F300062 - Cono, Pendant



CZ146DWWMDI - Cono, Pendant



LAMP-CONCEPT.CH



CZ149DVDMDI - Cono, Pendant



CZ149DVDMDI - Cono, Pendant

When switched off, Demì appears as a wide, transparent dome, a light and discreet presence in the space. But when illuminated, it reveals its unique nature: the lower edge and laser-etched micro-incisions softly diffuse a warm and enveloping light. Heat-blown PMMA diffuser, central aluminium ring.

Red Dot Design Award, Winner 2019

Technical Specification **Page 342** Demì Demì Moon **Download**

IT Da spenta, Demì si presenta come un'ampia cupola trasparente, una presenza leggera e discreta nello spazio. Ma è nell'accensione che svela il suo carattere unico: il bordo inferiore e le microincisioni laser sulla superficie diffondono una luce morbida e avvolgente. Diffusore in PMMA termosoffiato, anello centrale in alluminio.

FR Éteinte, Demì se présente comme un large dôme transparent, une présence légère et discrète dans l'espace. Mais une fois allumée, elle révèle son caractère unique : le bord inférieur et les micro-incisions laser diffusent une lumière douce et enveloppante Diffuseur en PMMA soufflé à chaud, anneau central en aluminium.

DE Im ausgeschalteten Zustand erscheint Demì als große, transparente Kuppel – eine leichte, unaufdringliche Präsenz im Raum. Doch beim Einschalten entfaltet sie ihr einzigartiges Wesen: Der untere Rand und die lasergravierten Mikrostrukturen streuen ein sanftes, gleichmäßiges Licht. Diffusor aus heißgeblasenem PMMA, Ring aus Aluminium.

**ES Cuando está apagada, Demì se percibe como una gran cúpula transparente, una presencia ligera y sutil en el espacio.
Pero al encenderse, revela su singularidad: el borde inferior y las microincisiones láser difunden una luz suave y homogénea.
Difusor en PMMA termosoplado, anillo central de aluminio.**



8890M - Demì, Pendant



8890M - Demì, Pendant



8890M - Demì, Pendant



9776M - Demì Moon, Floor



9776, 9775 - Demì Moon, Floor

9776M - Demì Moon, Floor



LAMP-CONCEPT.CH



8895M - Demì, Ceiling



8894M - Demì, Ceiling

Diphy **Designed by Mirco Crosatto** **2016**

Diphy is the harmonious union of elegance and technology. A luminous collection that evokes the lightness of petals, transparent and ethereal, intertwining organic forms with an innovative soul. More than just design, it offers a unique aesthetic and sensory experience. Thermocurved PMMA diffuser, aluminium body.

Compasso d'Oro, Honourable Mention 2018
Red Dot Design Award, Winner 2017

Technical Specification **Page 346** **Download**

IT Diphy è l'incontro armonioso tra eleganza e tecnologia. Una collezione luminosa che richiama la leggerezza dei petali, trasparenti e impalpabili, intrecciando forme organiche con un'anima innovativa. Un oggetto che va oltre il design, per regalare un'esperienza estetica e sensoriale senza pari. Diffusore in PMMA termo-curvato, corpo in alluminio.

FR Diphy est l'union harmonieuse de l'élégance et de la technologie. Une collection lumineuse qui évoque la légèreté des pétales, transparents et impalpables, mêlant formes organiques et âme innovante. Bien plus qu'un design : une expérience esthétique et sensorielle unique. Diffuseur en PMMA thermoformé, corps en aluminium

DE Diphy ist die harmonische Verbindung von Eleganz und Technologie. Eine Leuchtenkollektion, die an die Leichtigkeit transparenter, schwereloser Blütenblätter erinnert und organische Formen mit einer innovativen Seele vereint. Mehr als nur Design: ein einzigartiges ästhetisches und sinnliches Erlebnis. Diffusor aus heißgebogenem PMMA, Aluminiumgehäuse.

ES Diphy es la unión armoniosa de elegancia y tecnología. Una colección luminosa que evoca la ligereza de los pétalos, transparentes e ingrávidos, fusionando formas orgánicas con un alma innovadora. Más que diseño: una experiencia estética y sensorial única. Difusor de PMMA termoformado, cuerpo de aluminio.



8165M - Diphy, Floor



8169, 8170, 9090 - Diphy, Pendant



8165M - Diphy, Floor

8170M - Diphy, Pendant



8169 - Diphy, Pendant



8163M - Diphy, Wall/Ceiling



8163M - Diphy, Wall/Ceiling

Dynamic **Designed by Stilnovo** **2010**

Dynamic is a collection of Murano blown-glass lamps that combines artisanal tradition with modern technology, creating a homogeneous light further enhanced by the translucent base. Three different sizes allow for multiple wall-mounted combinations. Blown duplex glass diffuser.

Technical Specification **Page 350** **Download**

IT Dynamic è una collezione di lampade in vetro soffiato di Murano che unisce la tradizione artigianale alla tecnologia moderna, creando una luce omogenea enfatizzata anche dalla base traslucida. Tre diverse dimensioni consentono molteplici combinazioni a parete. Diffusore in vetro soffiato duplex.

FR Dynamic est une collection de lampes en verre soufflé de Murano qui allie tradition artisanale et technologie moderne, créant une lumière homogène, mise en valeur également par la base translucide. Trois dimensions différentes permettent de multiples compositions murales. Diffuseur en verre soufflé duplex.

DE Dynamic ist eine Kollektion von Murano-Mundglasleuchten, die handwerkliche Tradition mit moderner Technologie vereint und ein homogenes Licht erzeugt, das zudem durch den transluzenten Sockel betont wird. Drei verschiedene Größen ermöglichen vielfältige Wandkombinationen. Diffusor aus mundgeblasenem Duplex-Glas.

ES Dynamic es una colección de lámparas de vidrio soplado de Murano que combina la tradición artesanal con la tecnología moderna, creando una luz homogénea realzada también por la base translúcida. Tres tamaños diferentes permiten múltiples composiciones en pared. Difusor de vidrio soplado dúplex.



7785M - Dynamic, Wall

7785, 7786, 7787 - Dynamic, Wall



LAMP-CONCEPT.CH

Fante **Designed by Jonathan De Pas, Donato D'Urbino, Paolo Lomazzi** **1978**

The light of Fante is effortlessly shaped, thanks to its adjustable reflector, positioned directly on the bulb. A distinctive detail that not only enhances the purity of the design but also offers unparalleled versatility, allowing the light to be directed with precision and harmony.
Silicone base, adjustable aluminum disc.

Technical Specification **Page 352** **Download**

IT La luce di Fante si modella con estrema facilità, grazie al riflettore orientabile, posizionato direttamente sulla lampadina. Un dettaglio distintivo che non solo esalta la purezza del design, ma offre una versatilità senza pari, permettendo di dirigere la luce con precisione e armonia.
Base in silicone, disco orientabile in alluminio.

FR La lumière de Fante se façonne avec une extrême facilité, grâce à son réflecteur orientable, positionné directement sur l'ampoule.
Un détail distinctif qui met en valeur la pureté du design tout en offrant une polyvalence inégalée, permettant d'orienter la lumière avec précision et harmonie.
Base en silicone, disque orientable en aluminium.

DE Das Licht von Fante lässt sich mühelos formen – dank des schwenkbaren Reflektors direkt auf der Glühbirne
Ein markantes Detail, das nicht nur die Reinheit des Designs betont, sondern auch außergewöhnliche Vielseitigkeit bietet und das Licht präzise und harmonisch lenkt.
Silikonbasis, verstellbare Aluminiumscheibe.

ES La luz de Fante se moldea con total facilidad, gracias a su reflector orientable, colocado directamente sobre la bombilla.
Un detalle distintivo que no solo resalta la pureza del diseño, sino que también ofrece una versatilidad inigualable, permitiendo dirigir la luz con precisión y armonía.
Base de silicona, parábola en aluminio.



8968 - Fante, Table



8967 - Fante, Ceiling

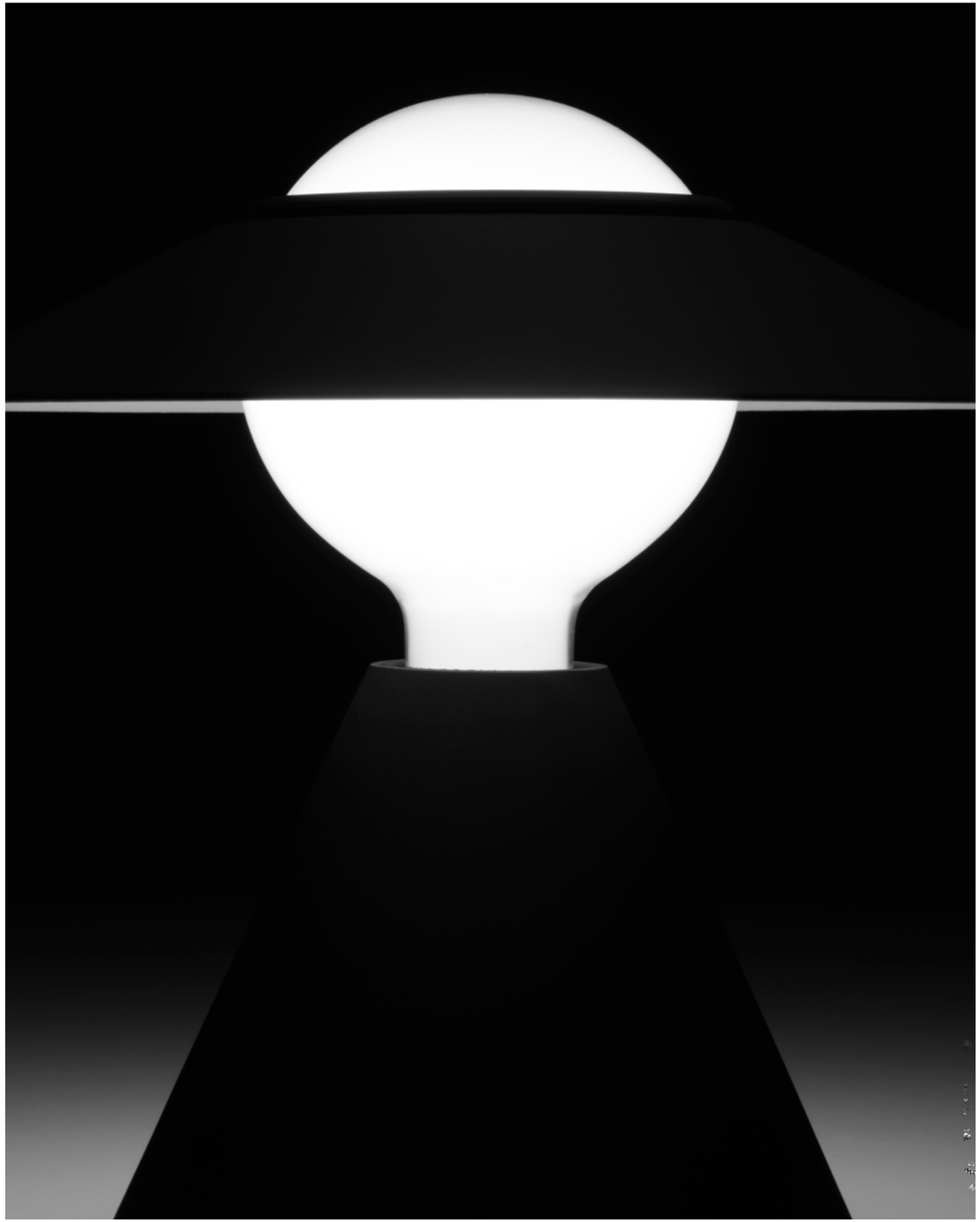

8966 - Fante, Table

Fronda draws inspiration from tree branches and seeks only the essential. Light and dynamic, it features seemingly two-dimensional structures and thin surfaces shaped to create an eclectic chandelier, with two diffuser types, also offered as a ceiling version. Aluminium body, diffusers in plastic material, fabric cable.

Technical Specification Page 354 Download

IT Fronda trae ispirazione dalle ramificazioni arboree e ricerca solo ciò che è indispensabile. Leggera e dinamica, è composta da strutture apparentemente bidimensionali e superfici sottili plasmate per creare uno chandelier eclettico, con due tipologie di diffusore, declinato anche a plafone. Corpo in alluminio, diffusori in materiale plastico, cavo in tessuto.

FR Fronda s'inspire des ramifications arborées et recherche uniquement l'essentiel. Légère et dynamique, elle présente des structures apparemment bidimensionnelles et des surfaces fines façonnées pour créer un lustre éclectique, avec deux types de diffuseur, proposé aussi en version plafonnier. Corps en aluminium, diffuseurs en plastique, câble en tissu.

DE Fronda lässt sich von baumartigen Verzweigungen inspirieren und konzentriert sich auf das Wesentliche. Leicht und dynamisch umfasst sie scheinbar zweidimensionale Strukturen und dünne geformte Flächen, die einen eklektischen Kronleuchter mit zwei Diffusorarten bilden, auch als Deckenleuchte erhältlich. Korpus aus Aluminium, Diffusoren aus Kunststoff, Kabel aus Stoff.

ES Fronda se inspira en las ramificaciones arbóreas y busca solo lo esencial. Ligera y dinámica, incorpora estructuras aparentemente bidimensionales y superficies delgadas moldeadas para crear una lámpara de araña ecléctica, con dos tipos de difusor, disponible también en versión de plafón. Cuerpo de aluminio, difusores de plástico, cable de tela.



CZ158CWHMDI - Fronda, Pendant



CZ158CWHMDI - Fronda, Pendant



CZ041DMTMDW - Fronda, Ceiling



CZ160CMTMDI - Fronda, Pendant



CZ160CMTMDI - Fronda, Pendant

CZ159CBBMDW - Fronda, Pendant

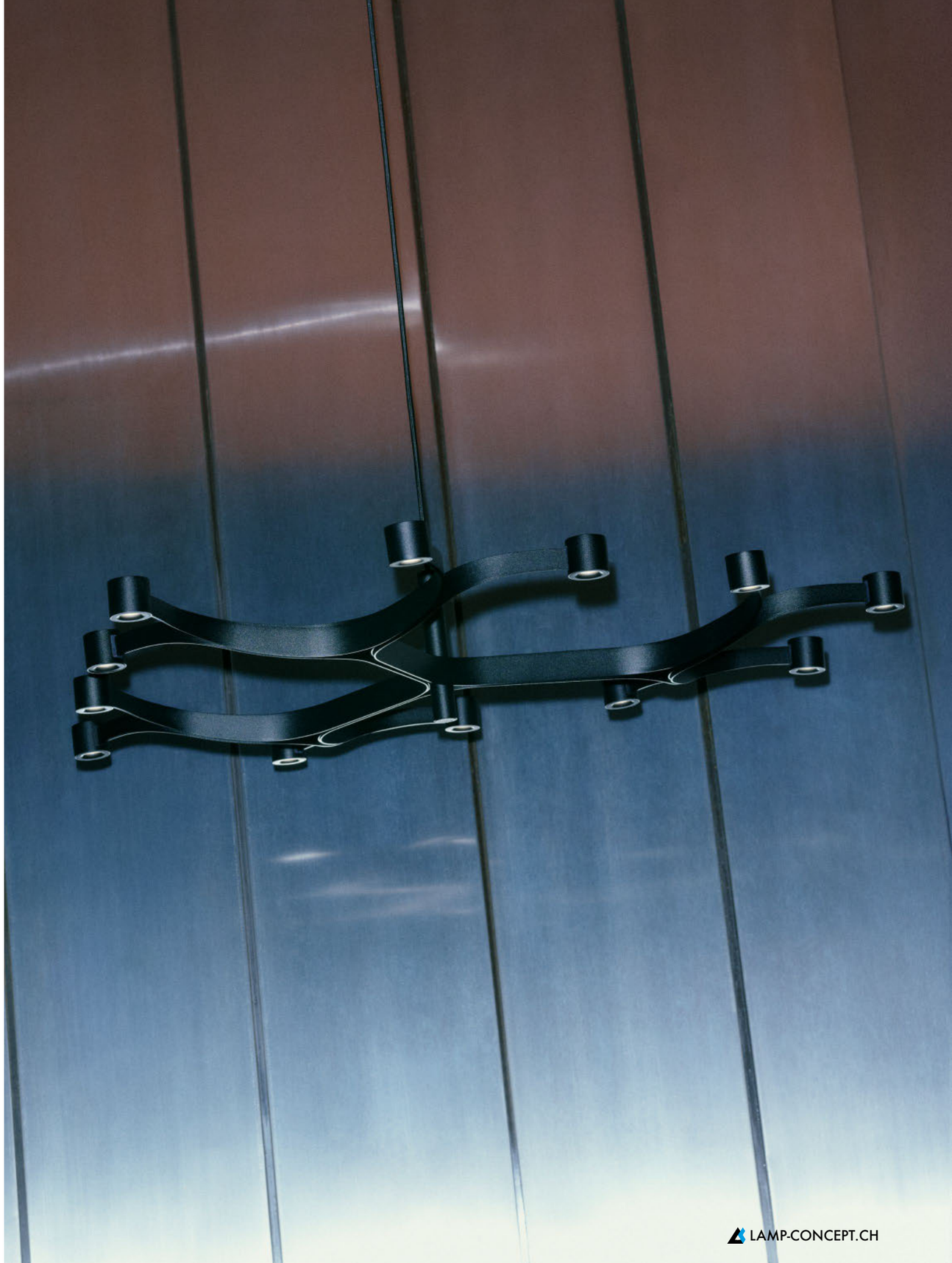

Galassia **Designed by Stilnovo** **1959**

Galassia is a tribute to 1950s design, a perfect balance between form and function.
The brass structure with galvanic gold plating harmonizes beautifully with the white triplex glass diffusers, creating an elegant lamp with a bold character.
Brass body, triplex glass diffusers.

Technical Specification **Page 358**

Download

**IT Galassia è un omaggio al design anni Cinquanta, un perfetto equilibrio tra forma e funzione.
La struttura in ottone con doratura galvanica si combina armoniosamente con i diffusori in vetro triplex bianco, dando vita a una lampada elegante dal carattere deciso.
Corpo in ottone, diffusori in vetro triplex.**

**FR Galassia rend hommage au design des années 50, un parfait équilibre entre forme et fonction.
La structure en laiton avec finition dorée galvanique s'harmonise parfaitement avec les diffuseurs en verre triplex blanc, créant ainsi une lampe élégante au caractère affirmé.
Corps en laiton, diffuseurs en verre triplex.**

**DE Galassia ist eine Hommage an das Design der 1950er Jahre – eine perfekte Balance zwischen Form und Funktion.
Die Messingstruktur mit galvanischer Vergoldung harmoniert perfekt mit den weiß getriplexten Glasdiffusoren und verleiht der Leuchte eine elegante, markante Ausstrahlung.
Korpus aus Messing, Diffusoren aus Triplex-Glas**

ES Galassia es un homenaje al diseño de los años 50, un equilibrio perfecto entre forma y función. La estructura de latón con baño dorado galvanizado se combina armoniosamente con los difusores de vidrio triplex blanco, dando vida a una lámpara elegante de carácter decidido. Cuerpo de latón, difusores en vidrio triplex.



9559 - Galassia, Wall



9559 - Galassia, Wall



9558 - Galassia, Wall



9556 - Galassia, Pendant



9555 - Galassia, Pendant

9556 - Galassia, Pendant





9560 - Galassia, Floor



9560 - Galassia, Floor

Goletta is one of the first examples of Stilnovo's pioneering use of plastic materials. This wall or ceiling lamp defies two-dimensionality with its flared silhouette and an internal structure meticulously designed to optimize light diffusion.
ABS or PMMA lamp body, polished aluminium reflector.

Technical Specification Page 362 Download

IT Goletta rappresenta uno dei primi esempi in cui Stilnovo ha esplorato l'uso di materiali plastici. Una lampada da parete o da soffitto che sfida la bidimensionalità grazie a una silhouette svasata e a una struttura interna studiata per ottimizzare la diffusione della luce.
Corpo lampada in ABS o PMMA, riflettore in alluminio lucidato

FR Goletta est l'un des premiers exemples d'utilisation innovante des matériaux plastiques par Stilnovo. Cette lampe murale ou plafonnier défie la bidimensionnalité avec une silhouette évasée et une structure interne étudiée pour optimiser la diffusion lumineuse.
Corps de lampe en ABS ou PMMA, réflecteur en aluminium poli.

DE Goletta ist eines der ersten Beispiele für den innovativen Einsatz von Kunststoffmaterialien durch Stilnovo. Diese Wand- oder Deckenleuchte bricht mit der Zweidimensionalität durch ihre ausgestellte Silhouette und eine durchdachte Innenstruktur zur Optimierung der Lichtstreuung. Korpus aus ABS oder PMMA, Reflektor aus poliertem Aluminium.

ES Goletta es uno de los primeros ejemplos del uso innovador de materiales plásticos por parte de Stilnovo. Esta lámpara de pared o techo desafía la bidimensionalidad con su silueta expandida y una estructura interna diseñada para optimizar la difusión de la luz. Cuerpo de lámpara en ABS o PMMA, reflector en aluminio brillante.



9737 - Goletta, Ceiling/Wall



9733 - Goletta, Ceiling/Wall



9733, 9736 - Goletta, Ceiling/Wall

Gomito / Colonna **Designed by Gae Aulenti** **1970s, 2026 re-edition**

The concepts of Gomito and Colonna, dating back to the early 1970s, express functional elegance through sculptural forms. In the current LED re-editions, Gomito and Colonna retain their original soft contours, reaffirming their status as timeless icons.
Aluminium body, polycarbonate diffusers.

Technical Specification **Page 364** **Download**

**IT I concept di Gomito e Colonna, risalenti ai primi anni ’70, esprimono eleganza funzionale in forme scultoree. Nelle attuali riedizioni con sorgenti a LED, Gomito e Colonna mantengono le originali strutture morbide confermandosi icone senza tempo.
Corpo in alluminio, diffusori in policarbonato.**

FR Les concepts de Gomito et Colonna, datant du début des années 1970, expriment une élégance fonctionnelle à travers des formes sculpturales. Dans les rééditions actuelles à LED, Gomito et Colonna conservent leurs lignes souples d’origine, s’affirmant comme des icônes intemporelles. Corps en aluminium, diffuseurs en polycarbonate.

**DE Die Konzepte von Gomito und Colonna aus den frühen 1970er-Jahren verbinden funktionale Eleganz mit skulpturalen Formen.
In den aktuellen LED-Neuauflagen bewahren sie ihre ursprünglichen weichen Linien und bestätigen ihren Status als zeitlose Ikonen.
Korpus aus Aluminium, Diffusoren aus Polycarbonat.**

**ES Los conceptos de Gomito y Colonna, creados a principios de los años setenta, expresan elegancia funcional mediante formas escultóricas.
En las reediciones actuales con LED, mantienen sus líneas suaves originales, reafirmándose como iconos atemporales.
Cuerpo de aluminio, difusores de policarbonato.**



CZ156DWWMWF - Colonna, Ceiling



CZ155DBBMWF - Colonna, Ceiling



CZ155DBBMWF - Colonna, Ceiling



CZ157FBBMDI - Colonna, Floor



CZ152DCTMDI - Gomito, Wall

LAMP-CONCEPT.CH



CZ153DWWMWF - Colonna, Pendant



CZ153DWWMWF - Colonna, Pendant

Designed in 1969, Gravita is a testament to Antonio Macchi Cassia's avant-garde vision. This iconic lamp, now re-engineered with LED sources, defies time and design boundaries, embodying the balance between innovation and simplicity.
Blown-glass diffuser, adjustable aluminium sphere, extruded aluminium base.

Technical Specification Page 368 Download

**IT Concept del 1969, Gravita è una testimonianza della visione avanguardista di Antonio Macchi Cassia. Questa lampada iconica, oggi reingegnerizzata con sorgenti LED, sfida il tempo e i confini del design, incarnando l'equilibrio tra innovazione e semplicità.
Diffusore in vetro soffiato, sfera orientabile in alluminio, base in estruso di alluminio.**

**FR Conçu en 1969, Gravita témoigne de la vision d'avant-garde d'Antonio Macchi Cassia. Cette lampe iconique, aujourd'hui repensée avec des sources LED, défie le temps et les limites du design, incarnant l'équilibre entre innovation et simplicité.
Diffuseur en verre soufflé, sphère orientable en aluminium, base en aluminium extrudé.**

**DE Das Design von 1969 macht Gravita zu einem Zeugnis der avantgardistischen Vision von Antonio Macchi Cassia. Die ikonische Leuchte, heute mit LED-Technologie neu entwickelt, vereint zeitlose Innovation und klare Einfachheit.
Diffusor aus mundgeblasenem Glas, verstellbare Aluminiumsphäre, Sockel aus extrudiertem Aluminium.**

**ES Concebida en 1969, Gravita es un testimonio de la visión de vanguardia de Antonio Macchi Cassia. Esta lámpara icónica, hoy rediseñada con fuentes LED, desafía el tiempo y los límites del diseño, encarnando el equilibrio entre innovación y simplicidad.
Difusor de vidrio soplado, esfera orientable de aluminio, base de aluminio extruido.**



9585 - Gravita, Table



9585 - Gravita, Table



9585 - Gravita, Table



9585 - Gravita, Table

The Gravitino 541 spheres stand out for their ability to integrate naturally into spaces. Their presence, subtle yet meaningful, adapts to any environment, fostering a sense of lightness and dynamism. The magnetic attachment allows full adjustability of the light source.
Spheres in glossy painted metal.

MoMA New York, Permanent Collection

Technical Specification **Page 370** Table Wall/Ceiling **Download**

IT Le sfere di Gravitino 541 si distinguono per la loro capacità di inserirsi negli spazi con naturalezza. La loro presenza, discreta ma significativa, si adatta a ogni ambiente, favorendo una percezione di leggerezza e dinamismo. Il fissaggio magnetico consente la totale orientabilità della sorgente luminosa. Sfere in metallo verniciato lucido.

FR Les sphères en Gravitino 541 se distinguent par leur capacité à s'intégrer naturellement dans les espaces. Leur présence, discrète mais significative, s'adapte à tout environnement, créant une sensation de légèreté et de dynamisme. La fixation magnétique permet une orientabilité totale de la source lumineuse. Sphères en métal peint brillant.

DE Sphären aus Gravitino 541 zeichnen sich durch ihre Fähigkeit aus, sich mühelos in Räume einzufügen. Ihre Präsenz, dezent und dennoch bedeutungsvoll, passt sich jeder Umgebung an und vermittelt ein Gefühl von Leichtigkeit und Dynamik. Die magnetische Befestigung ermöglicht eine vollständige Ausrichtung der Lichtquelle. Sphären aus glänzend lackiertem Metall.

ES Las esferas de Gravitino 541 destacan por su capacidad para integrarse naturalmente en los espacios. Su presencia, sutil pero significativa, se adapta a cualquier entorno, promoviendo una sensación de ligereza y dinamismo. La fijación magnética permite la orientabilidad total de la fuente luminosa. Esferas de metal pintado brillante.



9711 - Gravitino 541, Table

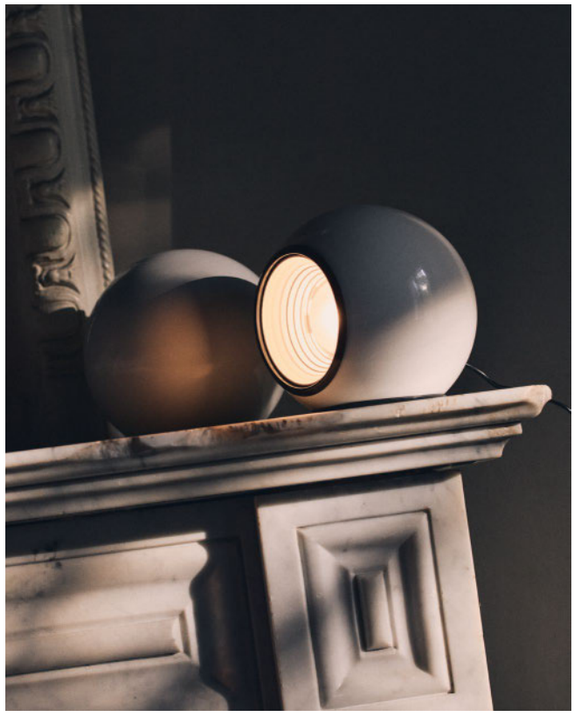

9711 - Gravitino 541, Table



9713, 9716 - Gravitino 541, Table



9714 - Gravitino 541, Table



9722 - Gravitino 541, Wall



9722 - Gravitino 541, Wall

Halley **Designed by Richard Sapper** **2005, 2023 re-edition**

Originally designed in 2005, Halley is an orbital structure that enables complete freedom of movement while staying in position, thanks to its six joints. The sphere functions as a counterweight to the luminaire, ensuring perfect balance and stability. Anodised aluminium body and head. Zamac base.

Good Design Award, Winner 2023

Technical Specification **Page 372** **Download**

**IT Originariamente progettata nel 2005, Halley è una struttura orbitale che consente una completa libertà di movimento pur rimanendo in posizione, grazie ai suoi sei snodi. La sfera funziona come contrappeso del corpo illuminante, garantendo equilibrio e stabilità.
Corpo e testa in alluminio anodizzato. Base in zama.**

**FR Conçue à l'origine en 2005, Halley est une structure orbitale qui permet une liberté totale de mouvement tout en restant en position, grâce à ses six articulations.
La sphère fonctionne comme un contrepoids au luminaire, assurant équilibre et stabilité.
Corps et tête en aluminium anodisé. Base en zamak.**

DE Ursprünglich entworfen im Jahr 2005, Halley ist eine Orbitalstruktur, die vollständige Bewegungsfreiheit ermöglicht und dennoch in Position bleibt, dank ihrer sechs Gelenke. Die Kugel fungiert als Gegengewicht zur Leuchte und sorgt für perfekte Balance und Stabilität. Korpus und Kopf aus loxiertem Aluminium. Fuß aus Zamak.

**ES Diseñada originalmente en 2005, Halley es una estructura orbital que permite una libertad total de movimiento mientras permanece en posición, gracias a sus seis articulaciones. La esfera funciona como contrapeso del luminario, garantizando equilibrio y estabilidad.
Cuerpo y cabeza en aluminio anodizado. Base en zamak.**



9587M - Halley, Table

9587M - Halley, Table



LAMP.CONCEPT.CH

9586M - Halley, Table

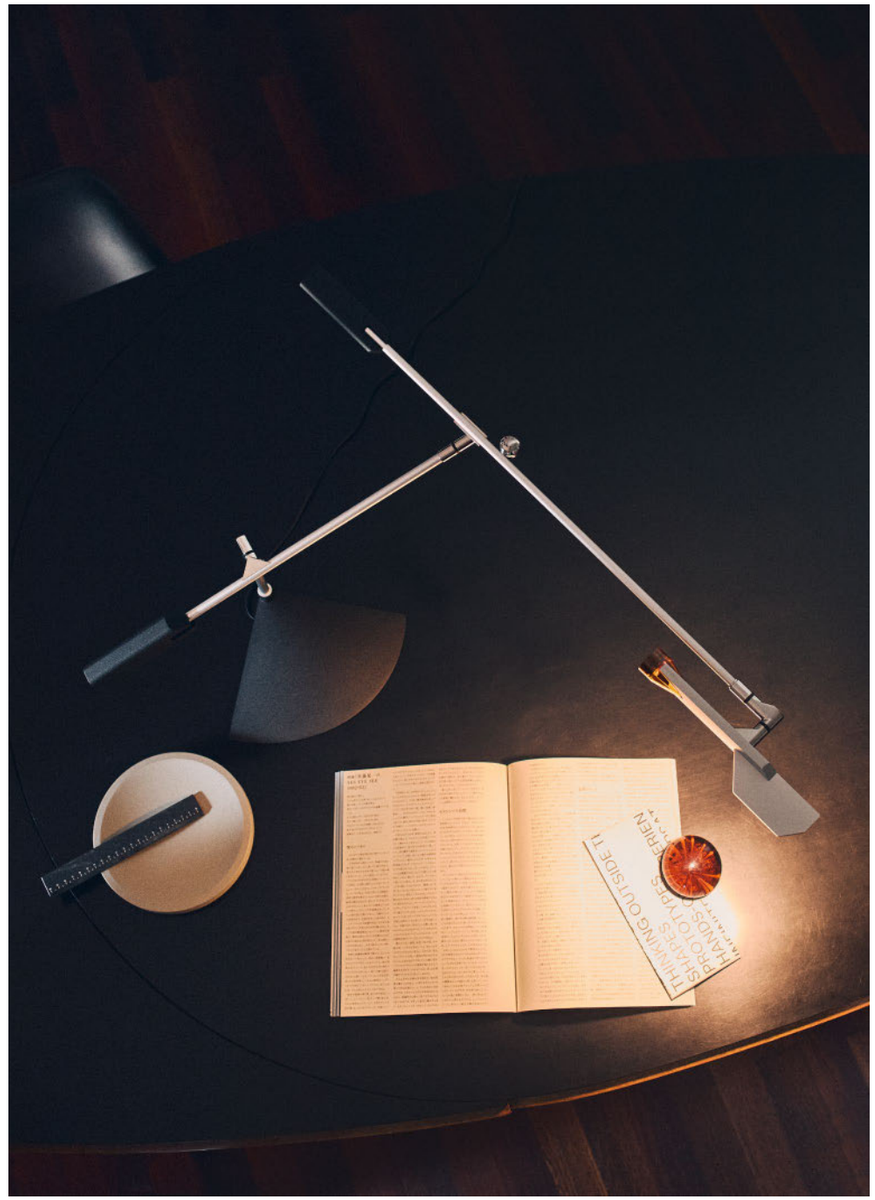

9587M - Halley, Table



9586M - Halley, Table



9586M - Halley, Table

Honey **Designed by Pio & Tito Toso** **2019**

Honey plays on the repetition of a modular element that multiplies into linear or circular configurations, creating light and dynamic structures. The light distribution is designed to enhance the three-dimensionality of the composition. Opaline polycarbonate modules.

Technical Specification **Page 374** **Download**

IT Honey gioca sulla ripetizione di un elemento modulare, che si moltiplica in configurazioni lineari o circolari dando vita a strutture leggere e dinamiche. La diffusione della luce è studiata per valorizzare la tridimensionalità della composizione. Moduli in policarbonato opalino.

FR Honey s'appuie sur la répétition d'un module qui se déploie en configurations linéaires ou circulaires, donnant vie à des structures légères et dynamiques. La diffusion de la lumière est conçue pour valoriser la tridimensionnalité de la composition. Modules en polycarbonate opalin.

DE Honey vervielfacht ein Modularelement zu linearen oder kreisförmigen Kompositionen und bildet dabei leichte, zugleich sehr dynamische Strukturen. Die Lichtverteilung betont klar die räumliche Tiefe und Wirkung der Komposition. Module aus opalinem Polycarbonat.

ES Honey juega con la repetición de un módulo que se multiplica en configuraciones lineales o circulares, creando estructuras ligeras y dinámicas. La difusión de la luz está pensada para resaltar la tridimensionalidad de la composición. Módulos de policarbonato opalino.



8686 - Honey, Pendant



8682 - Honey, Pendant



8686 - Honey, Pendant



8691 - Honey, Pendant



8691 - Honey, Pendant



8680 - Honey, Pendant



8680 - Honey, Pendant



8690 - Honey, Wall



8688 - Honey, Wall

Inbilico **Designed by Brian Sironi** **2023**

Inbilico stems from the encounter between two volumes that create a kind of unstable visual balance, accentuated by their inclination relative to the wall. It can be installed with the light facing upward or downward, as desired, indirectly illuminating the surrounding space.
Aluminium body, polyacarbonate diffuser.

Technical Specification **Page 378** **Download**

**IT Inbilico nasce dall'incontro tra due volumi che creano una sorta di equlibrio visivo instabile, accentuato dall'inclinazione rispetto alla parete.
Può essere installata volgendo a piacere la luce verso l'alto o verso il basso illuminando indirettamente l'ambiente circostante.
Corpo in alluminio, diffusore in policarbonato.**

**FR Inbilico naît de la rencontre entre deux volumes qui créent une sorte d'équilibre visuel instable, accentué par leur inclinaison par rapport au mur. Elle peut être installée en orientant la lumière vers le haut ou vers le bas, selon les préférences, éclairant indirectement l'espace environnant.
Corps en aluminium, diffuseur en polycarbonate.**

**DE Inbilico entsteht aus dem Zusammenspiel zweier Volumen, die eine Art instabiles visuelles Gleichgewicht erzeugen, verstärkt durch ihre Neigung zur Wand. Sie kann installiert werden, sodass das Licht je nach Wunsch nach oben oder nach unten gerichtet ist und den umgebenden Raum indirekt beleuchtet.
Korpus aus Aluminium, Diffusor aus Polycarbonat.**

**ES Inbilico nace del encuentro entre dos volúmenes que crean una especie de equilibrio visual inestable, acentuado por su inclinación respecto a la pared.
Puede instalarse orientando la luz hacia arriba o hacia abajo, según se desee, iluminando indirectamente
el entorno.
Cuerpo en aluminio, difusor de policarbonato.**



9781 - Inbilico, Wall



9781 - Inbilico, Wall



9783 - Inbilico, Wall

Kimia **Designed by Edin Dedovic** **2018**

The new Kimia family revolutionizes lighting with an essential design. The luminous disc can be rotated to adapt to any need, featuring warm LED sources for a soft, diffused illumination. In the floor version, the mechanism also allows the height to be adjusted. Disc and body in aluminum, polycarbonate diffuser.

Technical Specification **Page 380** **Download**

**IT La nuova famiglia Kimia rivoluziona l'illuminazione con un design essenziale.
Il disco illuminante può essere ruotato per adattarsi a ogni esigenza, con sorgenti LED calde per un'illuminazione morbida e diffusa.
Il meccanismo nella versione piantana consente di variarne anche l'altezza.
Disco e corpo in alluminio, diffusore in policarbonato.**

**FR La nouvelle famille Kimia révolutionne l'éclairage avec un design essentiel.
Le disque lumineux peut être orienté pour s'adapter à chaque besoin, avec des sources LED chaudes offrant une lumière douce et diffuse.
Dans la version lampadaire, le mécanisme permet également d'en ajuster la hauteur.
Disque et corps en aluminium, diffuseur en polycarbonate.**

**DE Die neue Kimia-Familie revolutioniert die Beleuchtung mit einem schlichten Design.
Die leuchtende Scheibe lässt sich drehen, um sich jedem Bedarf anzupassen, mit warmen LED-Lichtquellen für eine weiche, diffuse Ausleuchtung.
Bei der Stehleuchten-Version ermöglicht der Mechanismus zudem die Höhenverstellung.
Scheibe und Körper aus Aluminium, Diffusor aus Polycarbonat.**

**ES La nueva familia Kimia revoluciona la iluminación con un diseño esencial y funcional. El disco iluminador puede girarse para adaptarse a cualquier necesidad, con fuentes LED cálidas que proporcionan una luz suave y difusa. En la versión de pie, el mecanismo también permite ajustar la altura.
Disco y cuerpo de aluminio, difusor de policarbonato.**

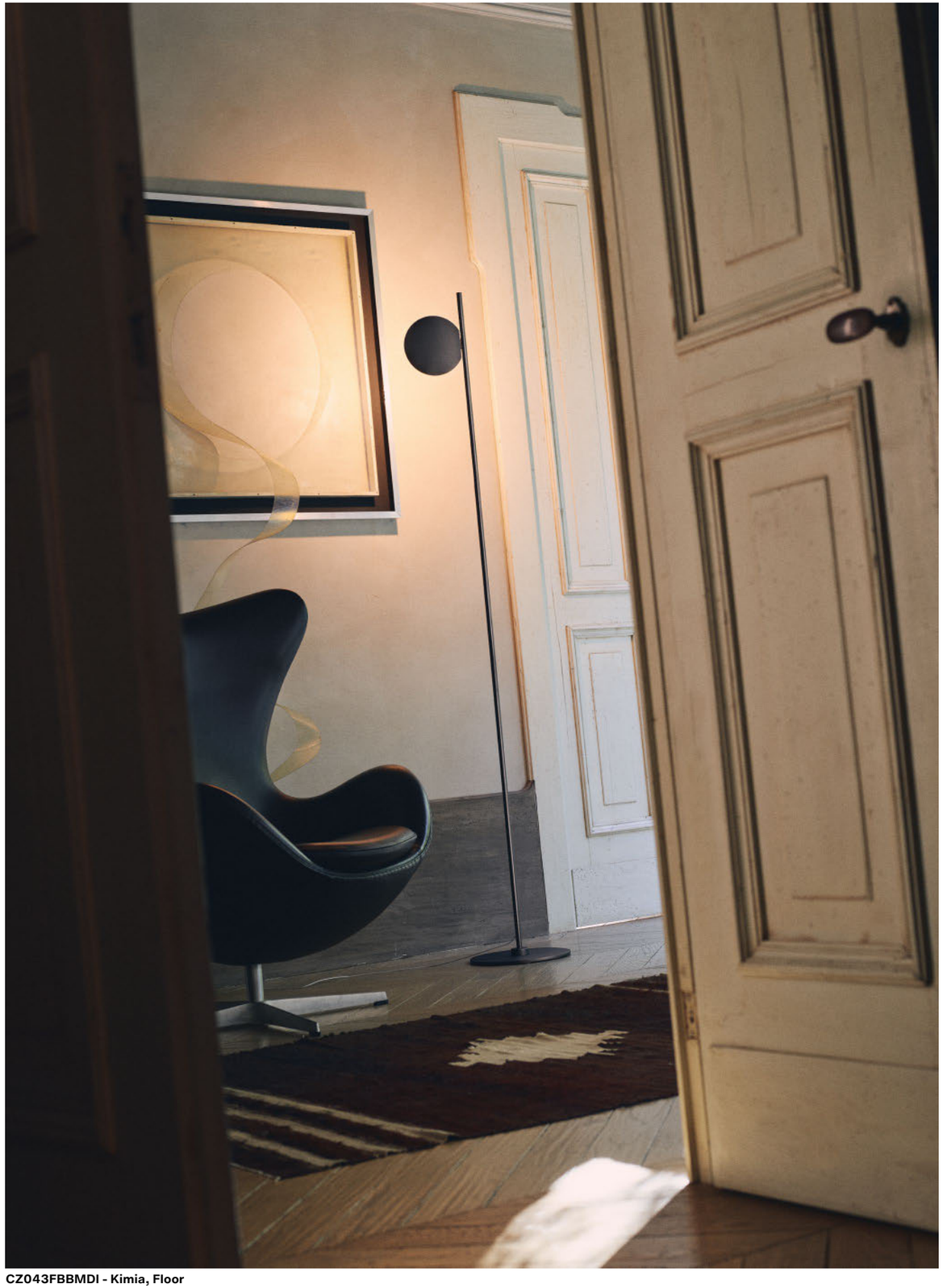

CZ043FBBMDI - Kimia, Floor

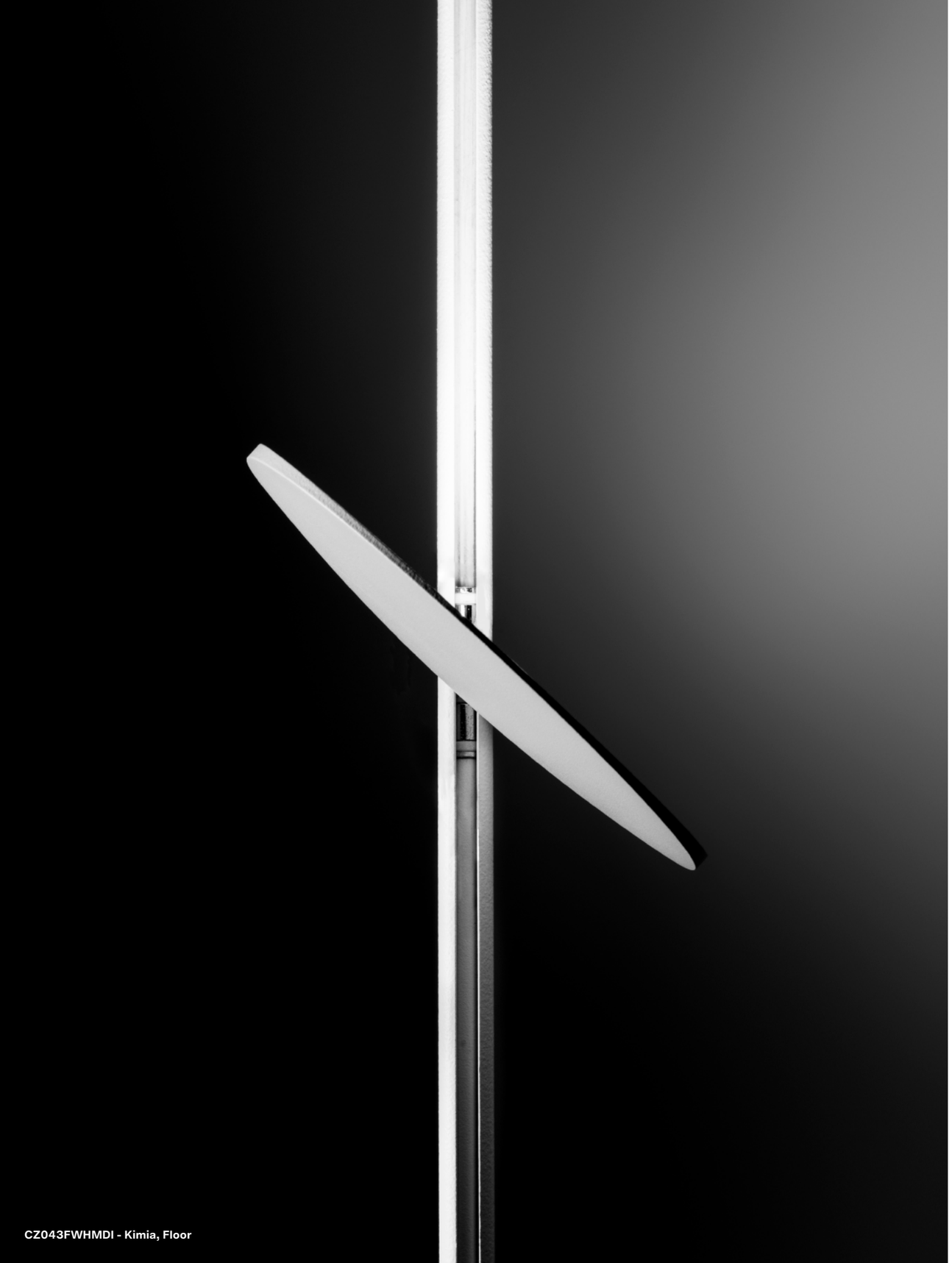

CZ043FWHMDI - Kimia, Floor



CZ043FBBMDI - Kimia, Floor



CZ043FBVMDI - Kimia, Floor



CZ043FBVMDI - Kimia, Floor



CZ039DBBMDI - Kimia, Pendant

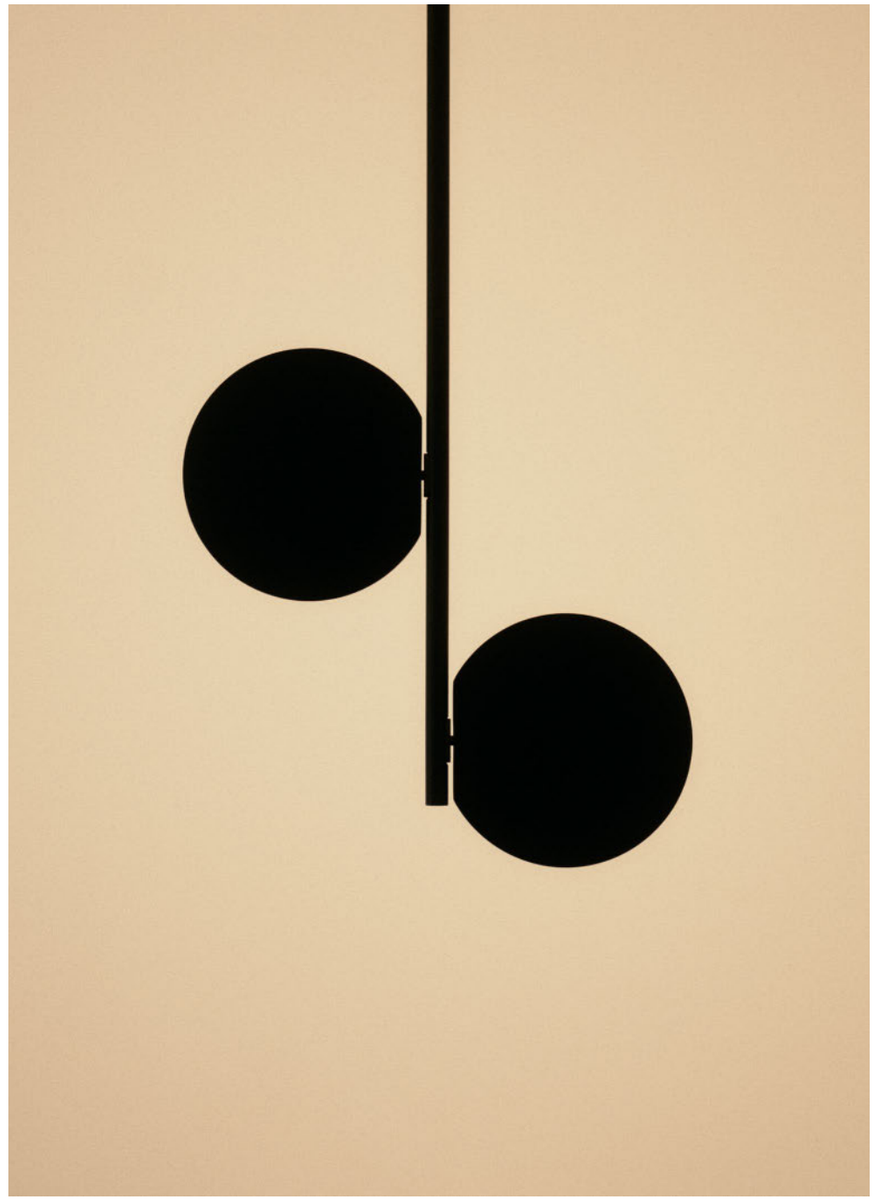

CZ039DBBMDI - Kimia, Pendant



CZ037DBVMDI - Kimia, Wall



CZ037DBVMDI - Kimia, Wall



CZ038DWHMDI - Kimia, Ceiling

LAMP-CONCEPT.CH

La Mariée **Designed by Mirco Crosatto** **2018**

La Mariée is the synthesis of lightness and substance. A blown glass sphere that glows from within, casting a soft and discreet light. The play of reflections on its transparent and metallic surfaces enriches any space with a touch of refined sophistication.
Blown glass diffuser, inner ring in aluminum.

Technical Specification **Page 384** **Download**

**IT La Mariée è la sintesi tra leggerezza e materia.
Una sfera di vetro soffiato che si illumina dall'interno, rivelando una luce avvolgente e discreta.
Il gioco di riflessi sulle superfici trasparenti e metallizzate impreziosisce ogni ambiente con un tocco di sofisticata raffinatezza.
Diffusore in vetro soffiato, anello interno in alluminio.**

**FR La Mariée est la synthèse entre légèreté et matière.
Une sphère en verre soufflé qui s'illumine de l'intérieur, révélant une lumière enveloppante et discrète.
Le jeu de reflets sur les surfaces transparentes et métallisées enrichit chaque espace d'une touche de raffinement sophistiqué.
Diffuseur en verre soufflé, anneau interne en aluminium.**

**DE La Mariée ist die Synthese aus Leichtigkeit und Materialität.
Eine mundgeblasene Glaskugel, die von innen heraus leuchtet und ein sanftes, dezentes Licht offenbart. Das Spiel der Reflexionen auf den transparenten und metallisierten Oberflächen veredelt jeden Raum mit einem Hauch anspruchsvoller Eleganz.
Diffusor aus mundgeblasenem Glas, innerer Aluminiumring.**

**ES La Mariée es la síntesis entre ligereza y materia. Una esfera de vidrio soplado que se ilumina desde el interior, revelando una luz envolvente y discreta. El juego de reflejos sobre las superficies transparentes y metalizadas embellece cualquier espacio con un toque de sofisticada elegancia.
Difusor de vidrio soplado, aro interno de aluminio.**



8624 - La Mariée, Pendant



8629 - La Mariée, Table



8626, 8627, 8625 - La Mariée, Pendant



8624 - La Mariée, Pendant

Lampiatta expresses the concept of industrial design in its purest form. With no joints or mechanisms, the reflector can be repositioned freely to tilt and direct the light.
A timeless object, capable of crossing eras without losing its character.
Aluminum diffuser. In the table/wall version, the body is made of plastic.

Technical Specification Page 386

Pendant

Table

Download

IT Lampiatta esprime il concetto di design industriale nella sua forma più pura. Senza snodi né meccanismi, il riflettore si può riposizionare a piacere per inclinare e orientare la luce. Oggetto senza tempo, attraversa le epoche senza perdere il suo carattere. Parabola in alluminio. Nella versione da tavolo/parete il corpo è in materiale plastico.

FR Lampiatta exprime le concept du design industriel dans sa forme la plus pure. Sans articulations ni mécanismes, le réflecteur peut être repositionné librement pour incliner et orienter la lumière. Un objet intemporel, capable de traverser les époques sans perdre son caractère. Diffuseur en aluminium. Dans la version de table/mur, le corps est en matériau plastique.

DE Lampiatta verkörpert das Konzept des Industriedesigns in seiner reinsten Form. Ohne Gelenke oder Mechanismen lässt sich der Reflektor frei neu positionieren, um das Licht zu neigen und auszurichten. Ein zeitloses Objekt, das Epochen überdauert, ohne seinen Charakter zu verlieren. Diffusor aus Aluminium. In der Tisch-/Wandversion besteht der Korpus aus Kunststoff.

ES Lampiatta expresa el concepto de diseño industrial en su forma más pura. Sin juntas ni mecanismos, el reflector puede reposicionarse libremente para inclinar y orientar la luz. Un objeto atemporal, capaz de atravesar las épocas sin perder su carácter. Difusor de aluminio. En la versión de mesa/pared, el cuerpo es de material plástico.



8971 - Lampiatta, Table/Wall



8972 - Lampiatta, Table/Wall



8972 - Lampiatta, Table/Wall



8971 - Lampiatta, Table/Wall

8983 - Lampiatta, Pendant



LAMP-CONCEPT.CH



8988 - Lampiatta, Pendant



8981, 8984, 8967, 8982, 8990, 8983, 8989 - Lampiatta, Pendant

Thanks to its elegant and distinctive design, Luna fits seamlessly into the most exclusive interiors. The patented joint of the suspension allows the disc to be oriented, creating a soft and welcoming atmosphere. The floor lamp appears suspended, light and immaterial. Body and diffuser in aluminum.

Technical Specification Page 388 Download

IT Grazie al suo design elegante e distintivo, Luna si inserisce perfettamente negli ambienti più esclusivi. Lo snodo brevettato della sospensione permette di orientare il disco, diffondendo un'atmosfera soffusa e accogliente. La piantana sembra sospesa, leggera e immateriale.
Corpo e diffusore in alluminio.

FR Grâce à son design élégant et distinctif, Luna s'intègre parfaitement dans les environnements les plus exclusifs. L'articulation brevetée de la suspension permet d'orienter le disque, diffusant une atmosphère douce et accueillante.
La lampadaire semble suspendue, légère et immatérielle. Corps et diffuseur en aluminium.

DE Dank ihres eleganten und markanten Designs fügt sich Luna perfekt in die exklusivsten Umgebungen ein. Das patentierte Gelenk der Hängevorrichtung ermöglicht es, die Scheibe auszurichten und eine sanfte, einladende Atmosphäre zu schaffen. Die Stehleuchte wirkt schweben, leicht und immateriell.
Korpus und Diffusor aus Aluminium.

ES Gracias a su diseño elegante y distintivo, Luna encaja perfectamente en los ambientes más exclusivos. La rótula patentada de la suspensión permite orientar el disco, creando una atmósfera suave y acogedora. La lámpara de pie parece suspendida: ligera e inmaterial.
Cuerpo y difusor de aluminio.



9705M - Luna, Pendant

9705M - Luna, Pendant



LAMP-CONCEPT.CH



9707 - Luna, Floor

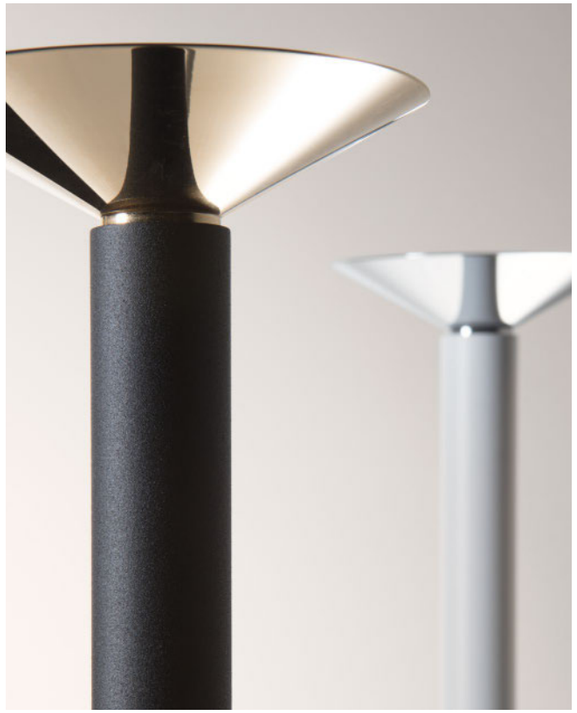

9707, 9709 - Luna, Floor



9703 - Luna, Pendant



9709M - Luna, Floor



9709M - Luna, Floor

Megafono **Designed by Stilnovo** **1958**

Megafono is a timeless 1950s icon, still capable of defining style today with its elegant silhouette and impeccable details. The double-cone design of the adjustable reflectors mixes direct and indirect light, creating a variety of warm and sophisticated atmospheres. Brass body, metal lampshades.

Technical Specification **Page 390** **Download**

**IT Megafono è un'icona senza tempo, nata negli anni Cinquanta e ancora oggi capace di definire lo stile con la sua silhouette elegante e i suoi dettagli impeccabili.
Il design a doppio cono dei paralumi orientabili combina luce diretta ed indiretta per creare differenti atmosfere calde e sofisticate.
Corpo in ottone, paralumi in metallo.**

**FR Megafono est une icône intemporelle, née dans les années 50 et qui continue aujourd'hui encore à définir le style avec sa silhouette élégante et ses détails impeccables.
Le design à double cône des réflecteurs orientables combine lumière directe et indirecte, créant différentes atmosphères chaleureuses et sophistiquées. Corps en laiton, abatjour en métal.**

**DE Megafono ist eine zeitlose Ikone, entstanden in den 1950er-Jahren und noch heute stilprägend mit ihrer eleganten Silhouette und makellosen Details. Das Doppelkegel-Design der verstellbaren Reflektoren vereint direktes und indirektes Licht und schafft vielfältige warme und anspruchsvolle Atmosphären.
Korpus aus Messing, Schirme aus Metall.**

**ES Megafono es un icono atemporal, nacido en los años 50 y aún hoy capaz de marcar estilo con su silueta elegante y sus detalles impecables.
El diseño de doble cono de los reflectores orientables combina luz directa e indirecta para crear diferentes atmósferas cálidas y sofisticadas.
Cuerpo en latón, pantallas de metal.**



9569 - Megafono, Pendant



9576 - Megafono, Pendant



9569 - Megafono, Pendant



9566 - Megafono, Pendant



9571 - Megafono, Wall



9574 - Megafono, Table



9572 - Megafono, Wall


LAMP-CONCEPT.CH

Meta **Designed by Stilnovo** **1970**

The Meta table lamp, designed by Stilnovo in the 1970s, is a perfect example of timeless design. With simple, essential lines, it comes to life from just a few pencil strokes, enough to create a masterpiece. Metal structure and cylindrical base, Triplex glass diffuser.

Technical Specification **Page 394** **Download**

IT La lampada da tavolo Meta, progettata da Stilnovo negli anni Settanta, rappresenta un perfetto esempio di design senza tempo. Dalle linee semplici ed essenziali, prende vita grazie a pochi segni di matita, sufficienti per creare un capolavoro.
Struttura e base cilindrica in metallo, diffusore in vetro triplex.

FR La lampe de table Meta, conçue par Stilnovo dans les années 1970, représente un parfait exemple de design intemporel.
Avec des lignes simples et essentielles, elle prend vie à partir de quelques traits de crayon, suffisants pour créer un chef-d'œuvre.
Structure et base cylindrique en métal, diffuseur en verre triplex.

DE Die Tischleuchte Meta, in den 1970er-Jahren von Stilnovo entworfen, ist ein perfektes Beispiel für zeitloses Design.
Mit einfachen, essenziellen Linien entsteht sie aus wenigen Bleistiftstrichen—ausreichend, um ein Meisterwerk zu schaffen.
Gestell und zylinderförmiger Fuß aus Metall,
Diffusor aus Triplex-Glas.

ES La lámpara de mesa Meta, diseñada por Stilnovo en los años setenta, es un ejemplo perfecto de diseño atemporal.
Con líneas simples y esenciales, cobra vida a partir de unos pocos trazos de lápiz, suficientes para crear una obra maestra.
Estructura y base cilíndrica en metal, difusor de cristal triplex.



9699 - Meta, Table



9702 - Meta, Table

LAMP-CONCEPT.CH



9702 - Meta, Table



9702 - Meta, Table



9698 - Meta, Table



9698 - Meta, Table

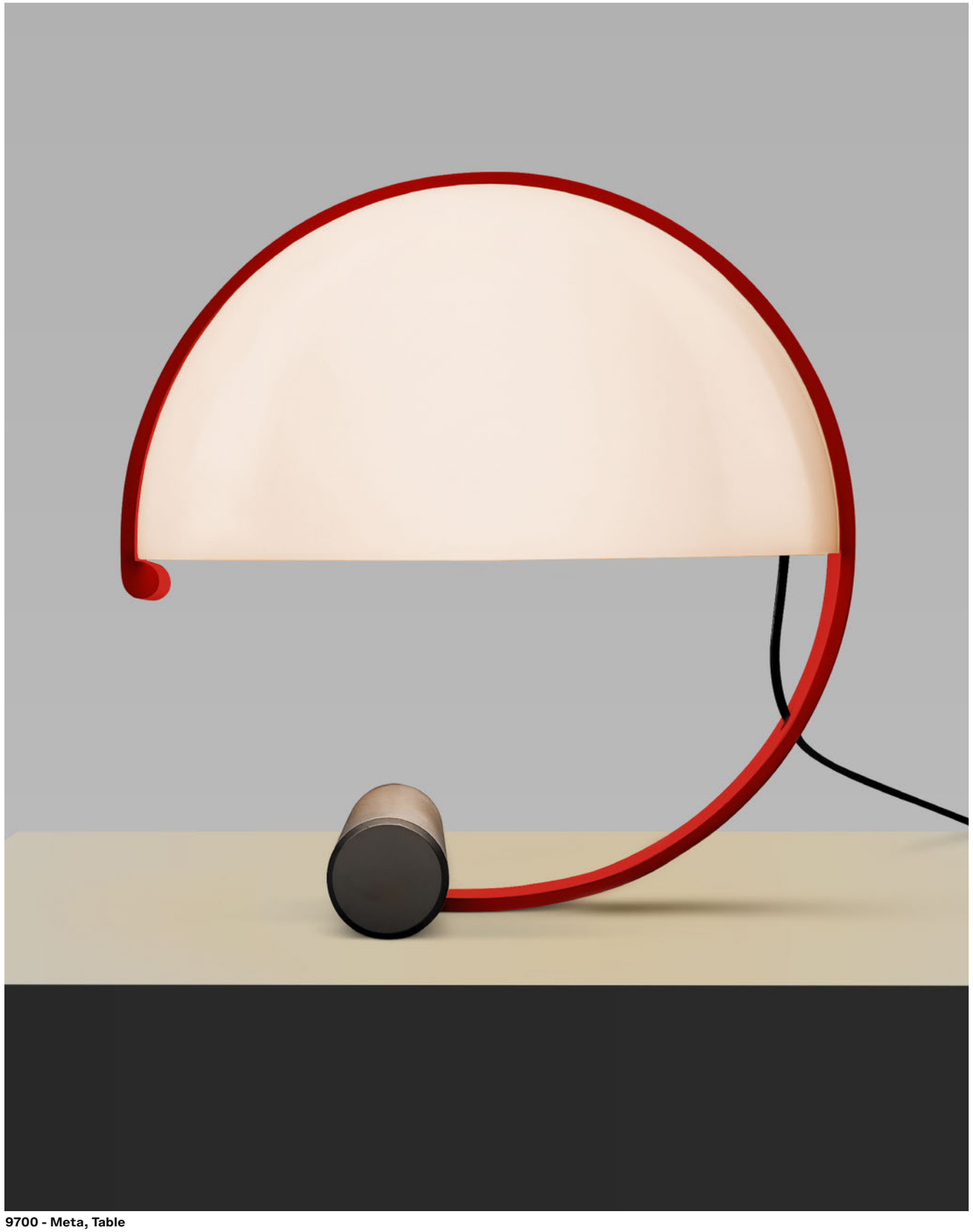

9700 - Meta, Table



9701 - Meta, Table

Minibox **Designed by Gae Aulenti, Piero Castiglioni** **1981**

A piece of rare design intelligence, both refined and versatile. Minibox combines technical precision with expressive lightness. The magnetic attachment of the adjustable head allows the light to be directed easily, making it suitable for a wide range of uses. Body and head in metal.

Technical Specification **Page 396** **Download**

IT Oggetto di rara intelligenza progettuale, icona colta e versatile.
Minibox coniuga rigore tecnico e leggerezza espressiva.
L'aggancio magnetico della testa orientabile permette di indirizzare la luce, rendendola adatta a illuminare molteplici situazioni.
Corpo e testa in metallo.

FR Objet d'une rare intelligence conceptuelle, icône cultivée et polyvalente.
Minibox conjugue rigueur technique et légèreté expressive. L'attache magnétique de la tête orientable permet de diriger la lumière, la rendant adaptée à de multiples situations d'éclairage.
Corps et tête en métal.

DE Ein Objekt seltener gestalterischer Intelligenz, kultiviert und vielseitig.
Minibox vereint technische Präzision mit ausdrucksvoller Leichtigkeit. Die magnetische Befestigung des verstellbaren Kopfes ermöglicht eine gezielte Lichtausrichtung und macht sie für zahlreiche Situationen geeignet.
Korpus und Kopf aus Metall.

ES Un objeto de rara inteligencia proyectual, culto y versátil.
Minibox combina rigor técnico y ligereza expresiva.
El enganche magnético de la cabeza orientable permite dirigir la luz fácilmente, haciéndola adecuada para múltiples situaciones.
Cuerpo y cabeza de metal.



9289 - Minibox, Table



9288 - Minibox, Table



9288 - Minibox, Table



9275 - Minibox, Table



9286, 9287 - Minibox, Table

Mongolfier **Designed by Stilnovo** **2016**

The new Mongolfier family enchants with its visual lightness. Its sinuous, shimmering forms embrace a warm light, creating fascinating interplays of reflections and shadows that enrich any space. Body in glossy painted metal.

Technical Specification **Page 398** **Download**

IT La nuova famiglia Mongolfier incanta per la sua leggerezza visiva. Le sue forme sinuose e brillanti abbracciano una luce calda, creando affascinanti intrecci di riflessi ed ombre che impreziosiscono ogni ambiente.
Corpo in metallo verniciato lucido.

FR La nouvelle famille Mongolfier séduit par sa légèreté visuelle. Ses formes sinueuses et lumineuses enveloppent une lumière chaude, créant d'envoûtants jeux de reflets et d'ombres qui subliment chaque espace.
Corps en métal peint brillant.

DE Die neue Mongolfier-Familie begeistert durch ihre visuelle Leichtigkeit. Ihre geschwungenen, glänzenden Formen umhüllen ein warmes Licht und erzeugen faszinierende Spiele aus Reflexen und Schatten, die jeden Raum veredeln.
Korpus aus glänzend lackiertem Metall.

ES La nueva familia Mongolfier encanta por su ligereza visual. Sus formas sinuosas y brillantes abrazan una luz cálida, creando fascinantes juegos de reflejos y sombras que embellecen cualquier ambiente.
Cuerpo en metal pintado brillante.



CZ032DUSMDI - Mongolfier, Pendant



CZ032DBCMDI, CZ030DBCMDI, CZ031DBCMDI - Mongolfier, Pendant



CZ030DPQMDI, CZ030DPWMDI - Mongolfier, Pendant

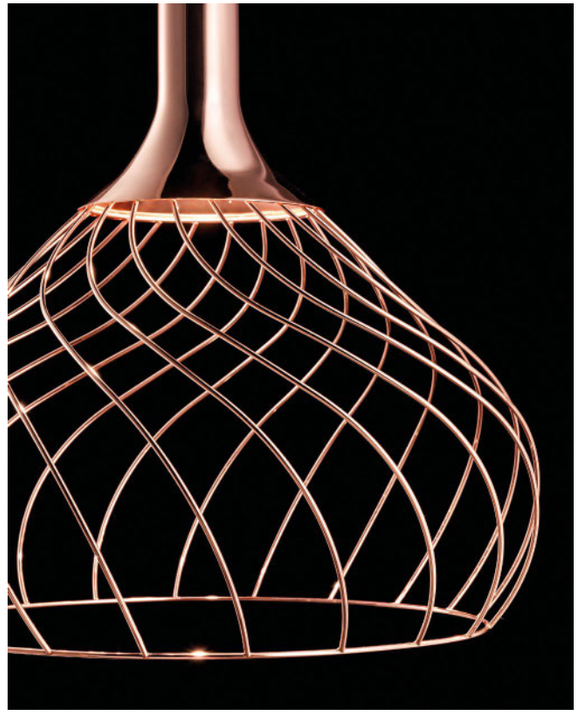

CZ031DRGMDI - Mongolfier, Pendant

Mr Magoo is a luminous sculpture. Its sinuous, organic lines evoke the softness of a cloud, transforming any space with an ethereal elegance. The light source is entirely integrated and emits soft and diffused light. Multiple elements allow the creation of an extensive array of scenographies. Polyethylene diffuser.

Red Dot Design Award, Winner 2015

Technical Specification Page 400 Download

IT **Mr Magoo è una vera e propria scultura luminosa. Le sue linee sinuose e organiche evocano la delicatezza di una nuvola, trasformando lo spazio con un'eleganza eterea. La sorgente è completamente integrata ed emette una luce morbida e diffusa. Più elementi permettono la creazione di scenografie di ampio respiro. Diffusore in polietilene.**

FR **Mr Magoo est une véritable sculpture lumineuse. Ses lignes sinueuses et organiques rappellent la douceur d'un nuage, apportant une élégance aérienne à tout espace. La source est complètement intégrée et émet une lumière douce et diffuse. Plusieurs éléments permettent de créer des scénographies très variées. Diffuseur en polyéthylène.**

DE **Mr Magoo ist eine leuchtende Skulptur. Ihre geschwungenen, organischen Linien erinnern an die Weichheit einer Wolke und verleihen jedem Raum eine ätherische Eleganz. Die Quelle ist vollständig integriert und strahlt ein weiches Streulicht aus. Mehrere Elemente erlauben die Kreation von facettenreichen Szenen. Diffusor aus Polyethylen.**

ES **Mr Magoo es una verdadera escultura luminosa. Sus líneas sinuosas y orgánicas evocan la delicadeza de una nube, transformando el espacio con una elegancia etérea. La fuente está completamente integrada y emite una luz suave y difusa. Varios elementos permiten la creación de escenografías de gran amplitud. Difusor en polietileno.**



8007M - Mr Magoo, Pendant

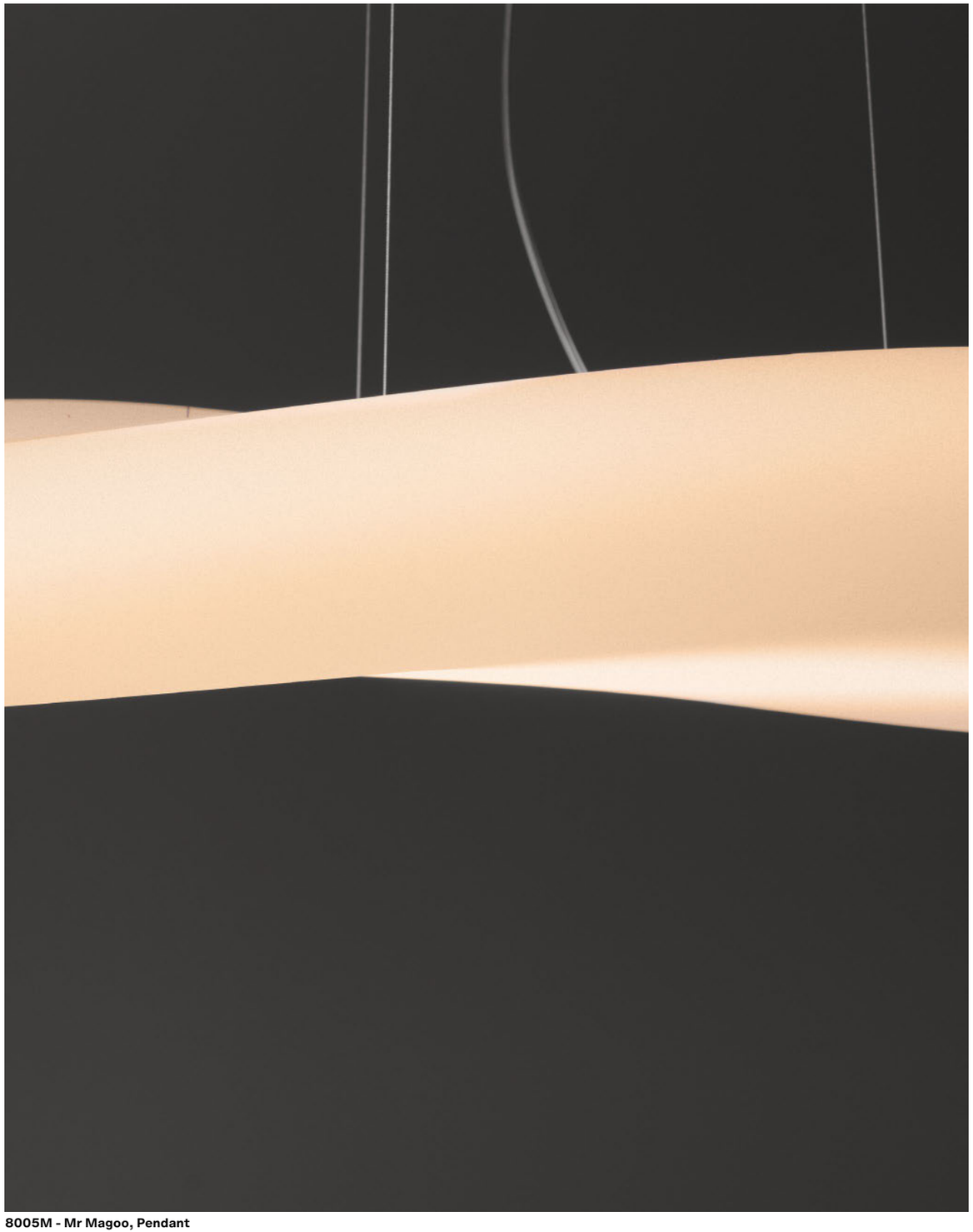

8005M - Mr Magoo, Pendant



8007M - Mr Magoo, Pendant



8009M - Mr Magoo, Floor



8009M - Mr Magoo, Floor

8006M - Mr Magoo, Ceiling

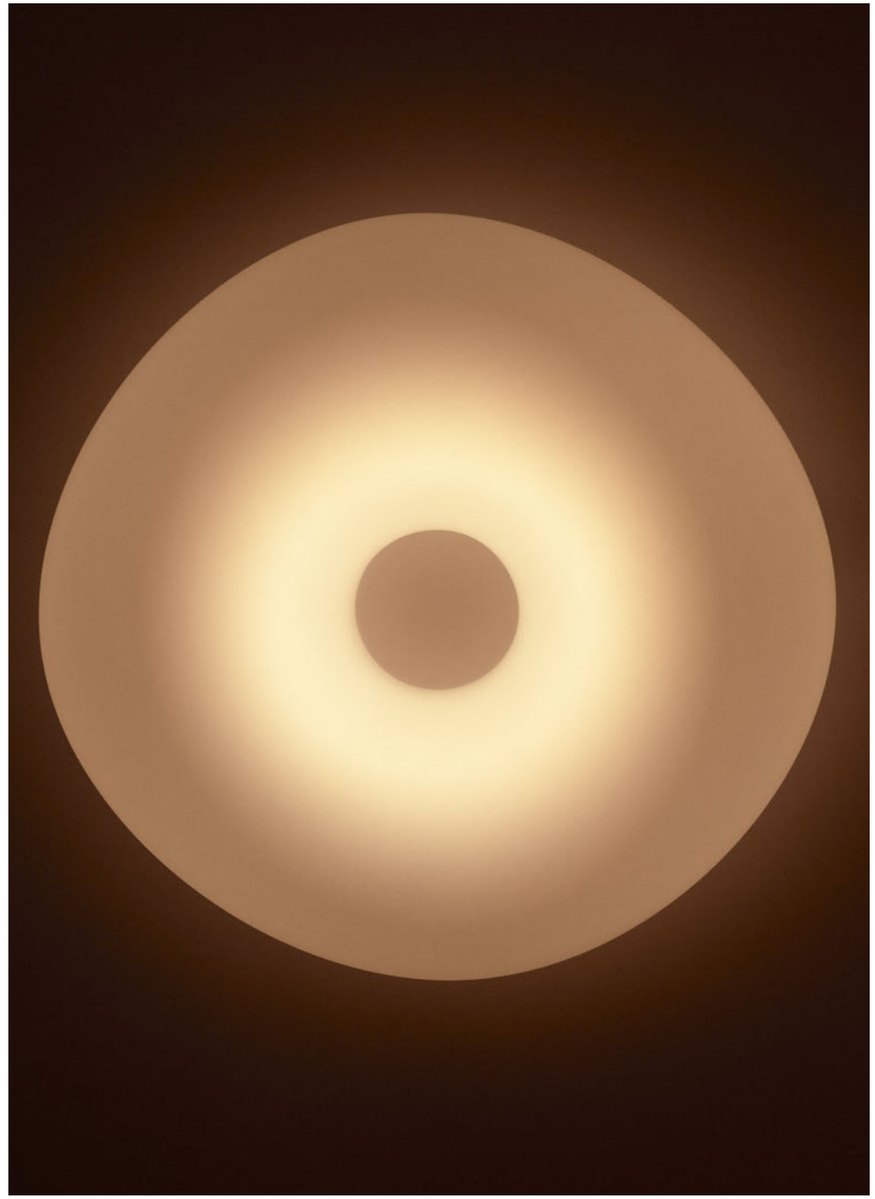

8006M - Mr Magoo, Ceiling

In nature, it is a symbol of birth, warmth, and family. In design, it becomes a simple sign rich in meaning. Nido emits a warm, soft light, which can be directed by rotating the small cup. A minimal yet refined collection, enhanced by its dual matte/glossy finish. Aluminium cup, metal structure, PMMA diffuser.

Technical Specification Page 406 Download

IT In natura, simbolo di nascita, accoglienza, famiglia. Progettualmente, un segno semplice ma ricco di significati. Nido genera una luce calda, morbida, orientabile grazie alla rotazione della coppetta. Una collezione minimale e ricercata, grazie alla doppia finitura opaco/lucida. Coppetta in alluminio, struttura in metallo, diffusore in PMMA.

FR Dans la nature, il est symbole de naissance, d'accueil et de famille. Dans le projet, il devient un signe simple mais chargé de sens. Nido diffuse une lumière chaude et douce, orientable grâce à la rotation de la petite coupelle. Une collection minimale et raffinée, sublimée par la double finition mate/brillante. Coupelle en aluminium, structure en métal, diffuseur en PMMA.

DE In der Natur ein Symbol für Geburt, Geborgenheit und Familie. Im Design wird es zu einem einfachen, aber bedeutungsvollen Zeichen. Nido erzeugt ein warmes, sanftes Licht, das sich durch Drehen der kleinen Schale ausrichten lässt. Eine minimalistische, elegante Kollektion mit mattem und glänzendem Finish. Schale aus Aluminium, Struktur aus Metall, Diffusor aus PMMA.

ES En la naturaleza es símbolo de nacimiento, acogida y familia. En el diseño se convierte en un gesto simple pero lleno de significado. Nido genera una luz cálida y suave, orientable gracias a la rotación de la pequeña copa. Una colección minimalista y cuidada, realzada por el acabado doble mate/brillo. Cazoleta de aluminio, estructura de metal, difusor de PMMA.



CZ012DMUMDI - Nido, Pendant

CZ012DMUMDI - Nido, Pendant



LAMP-CONCEPT.CH



CZ011DLKMDI - Nido, Pendant



CZ011DLKMDI - Nido, Pendant

CZ010DWTMDI - Nido, Pendant



LAMP-CONCEPT.CH



CZ009DMUMDI - Nido, Wall



CZ009DMUMDI - Nido, Wall



CZ009DMUMDI - Nido, Wall



CZ013IMUMDI - Nido, Floor





CZ028ILKMDI - Nido, Floor

Opti-line **Designed by Stilnovo** **2016**

Opti-line is a pendant light that defies perception: when switched off, its slim transparent panel disappears into the space; when turned on, it transforms into a uniform, diffused light source. PMMA diffuser, aluminium ring.

Technical Specification **Page 410** **Download**

IT Opti-line è una sospensione che sfida la percezione: quando spenta, la sua sottile lastra trasparente si dissolve nello spazio; quando accesa, si trasforma in una fonte luminosa uniforme e diffusa.
Diffusore in PMMA, anello in alluminio.

FR Opti-line est une suspension qui défie la perception : éteinte, sa fine plaque transparente se fond dans l'espace ; allumée, elle devient une source lumineuse uniforme et diffuse.
Diffuseur en PMMA, anneau en aluminium.

DE Opti-line ist eine Pendelleuchte, die die Wahrnehmung herausfordert: Ausgeschaltet verschwindet ihre dünne, transparente Platte im Raum; eingeschaltet wird sie zur gleichmäßigen, diffusen Lichtquelle.
Diffusor aus PMMA, Ring aus Aluminium.

ES Opti-line es una lámpara colgante que desafía la percepción: apagada, su delgado panel transparente se fusiona con el espacio; encendida, se convierte en una fuente de luz uniforme y difusa.
Difusor en PMMA, anillo de aluminio.



8037 - Opti-line, Pendant



LAMP-CONCEPT.CH

Oxygen **Designed by Pio & Tito Toso** **2016**

Oxygen reinterprets the lampshade in a contemporary way, transforming the transparent diffuser into a mirror of light thanks to OptiLight™ technology. Its profile is expressed in harmonious proportions across the entire collection, creating a broad and versatile offering. Lampshade in polyurethane, diffuser in PMMA.

Red Dot Design Award, Winner 2017

Technical Specification **Page 412** **Download**

IT Oxygen reinterpreta il paralume in chiave contemporanea, trasformando il diffusore trasparente in uno specchio di luce grazie alla tecnologia OptiLight™. Il suo profilo viene declinato in proporzioni armoniche in tutta la collezione, dando vita a una proposta ampia e trasversale. Paralume in poliuretano, diffusore in PMMA.

FR Oxygen réinterprète l'abat-jour dans un esprit contemporain, transformant le diffuseur transparent en un miroir de lumière grâce à la technologie OptiLight™. Son profil se décline en proportions harmonieuses dans toute la collection, donnant vie à une proposition vaste et transversale. Abat-jour en polyuréthane, diffuseur en PMMA.

DE Oxygen interpretiert den Lampenschirm zeitgemäß neu und verwandelt den transparenten Diffusor dank der OptiLight™-Technologie in einen Lichtspiegel. Sein Profil erscheint in harmonischen Proportionen in der gesamten Kollektion und ergibt eine breite, vielseitige Auswahl. Schirm aus Polyurethan, Diffusor aus PMMA.

ES Oxygen reinterpreta la pantalla en clave contemporánea, transformando el difusor transparente en un espejo de luz gracias a la tecnología OptiLight™. Su perfil se expresa con proporciones armónicas en toda la colección, dando vida a una propuesta amplia y versátil. Pantalla de poliuretano, difusor de PMMA.



8101 - Oxygen, Floor

8101 - Oxygen, Floor



8098 - Oxygen, Floor



8089, 8094 - Oxygen, Pendant



8186 - Oxygen, Wall

Papylia **Designed by Giuseppe Maurizio Scutellà** **2026**

Papylia, from the Latin “butterflies”, is a collection of lamps where light gently rests on transparent glass wings with soft, natural forms. A precious luminous trace characterizes the entire collection, generating dynamic patterns that shift and change depending on the viewer’s perspective. Aluminum body, glass diffusers.

Technical Specification **Page 416** **Download**

IT Papylia, dal latino “farfalle”, è una collezione di lampade in cui la luce si posa con leggerezza su ali di vetro trasparente, dalle forme morbide e naturali. Una preziosa traccia luminosa caratterizza l’intera collezione, generando trame dinamiche che si trasformano e mutano a seconda del punto di vista dell’osservatore. Corpo in alluminio, diffusori in vetro.

FR Papylia, du latin “papillons”, est une collection de lampes où la lumière se pose avec légèreté sur des ailes de verre transparent aux formes douces et naturelles. Une précieuse trace lumineuse caractérise toute la collection, générant des trames dynamiques qui se transforment selon le point de vue de l’observateur. Corps en aluminium, diffuseurs en verre.

DE Papylia, vom lateinischen „Schmetterlinge“, ist eine Leuchtenkollektion, in der sich das Licht sanft auf transparenten Glasflügeln mit weichen, natürlichen Formen niederlässt. Eine kostbare Lichtspur prägt die gesamte Kollektion und erzeugt dynamische Muster, die sich je nach Blickwinkel verändern. Korpus aus Aluminium, Diffusoren aus Glas.

ES Papylia, del latín “mariposas”, es una colección de lámparas donde la luz se posa con ligereza sobre alas de vidrio transparente, de formas suaves y naturales. Un valioso rastro luminoso caracteriza toda la colección, generando tramas dinámicas que se transforman según el punto de vista del observador. Cuerpo de aluminio, difusores de vidrio.



CZ021CPZMDI - Papylia, Pendant



CZ022CMSMDI - Papylia, Pendant



LAMP-CONCEPT.CH



CZ033CWDMDI - Papylia, Ceiling



CZ026CPZMDI - Papylia, Ceiling

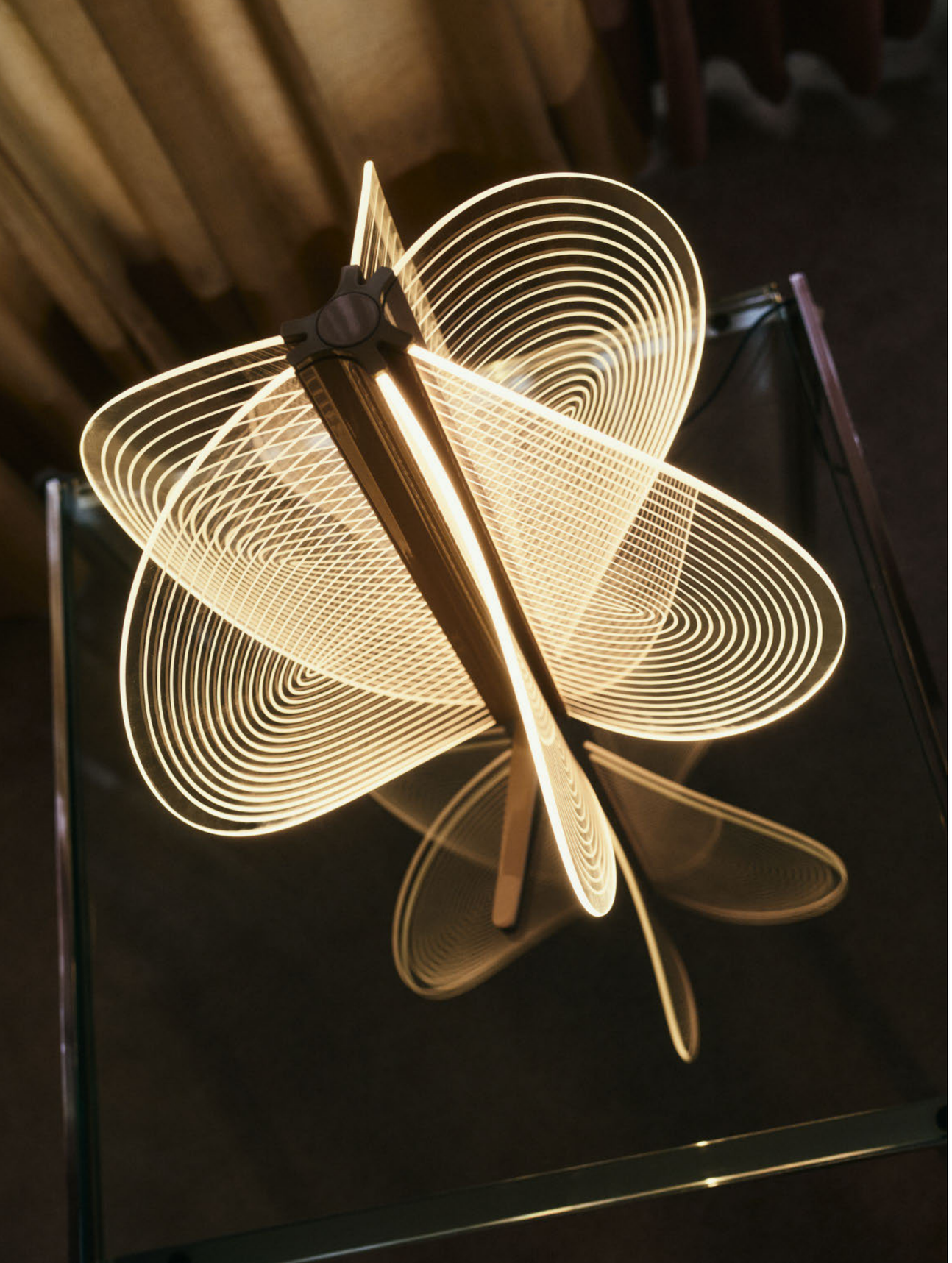



CZ025PMSMDI - Papylia, Table



CZ027FPZMDI - Papylia, Floor

LAMP-CONCEPT.CH

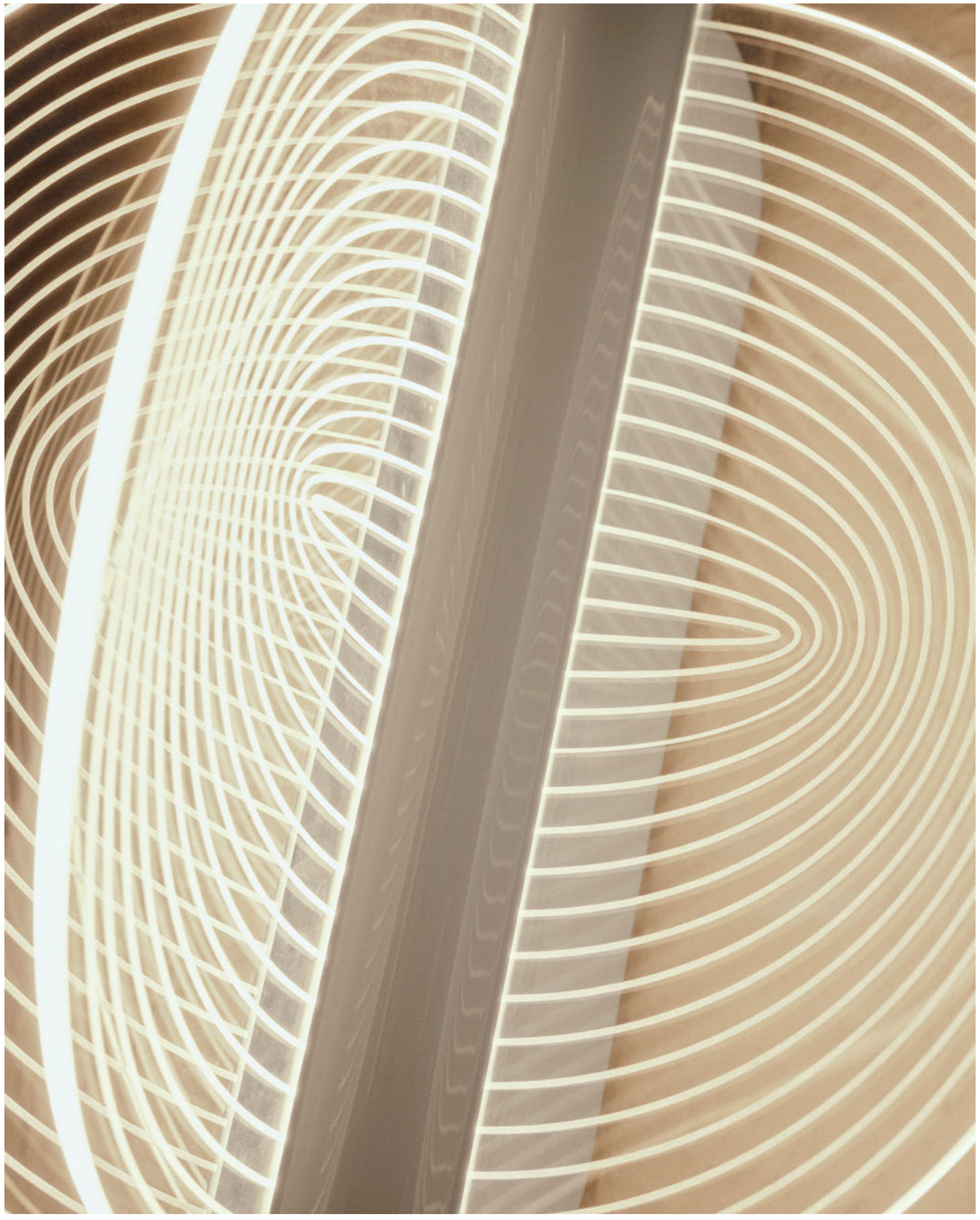

CZ023CWDMDI - Papylia, Wall



CZ023CWDMDI - Papylia, Wall



CZ024FPZMDI - Papylia, Floor



CZ024FPZMDI - Papylia, Floor

Designed in the true spirit of the Space Age, the Periscopio lamp embodies the futuristic charm of the 1960s. Its joint, covered in flexible rubber, recalls the connectors of space suits, evoking an aesthetic that blends functionality with retro-futuristic appeal.
Stainless steel body, flexible rubber joint, metal base.

MoMA New York, Permanent Collection

Technical Specification Page 422 Download

**IT Disegnata nel pieno spirito della space age, la lampada Periscopio richiama il fascino futuristico degli anni Sessanta. Lo snodo, rivestito in gomma flessibile, rievoca i giunti delle tute spaziali, evocando un'estetica che unisce funzionalità e suggestioni retrofuturistiche.
Corpo in acciaio inox, snodi in gomma flessibile, base in metallo.**

**FR Conçue dans l'esprit pur de l'ère spatiale, la lampe Periscopio évoque le charme futuriste des années 1960. Son articulation, recouverte de caoutchouc flexible, rappelle les joints des combinaisons d'astronautes, alliant fonctionnalité et charme rétrofuturiste.
Corps en acier inoxydable, joints flexibles en caoutchouc, base métallique.**

**DE Entworfen im wahren Geist des Space Age, fängt die Periscopio-Lampe den futuristischen Charme der 1960er Jahre ein. Ihr Gelenk, mit flexiblem Gummi überzogen, erinnert an die Verbindungen von Astronautenanzügen und kombiniert Funktionalität mit retrofuturistischem Flair.
Korpus aus rostfreiem Edelstahl, Gelenke aus weichem Gummi, Fuß aus Metall.**

**ES Diseñada en el verdadero espíritu de la era espacial, la lámpara Periscopio captura el encanto futurista de los años 60. Su articulación, recubierta de goma flexible, recuerda las conexiones de los trajes de astronauta y combina funcionalidad con un estilo retrofuturista.
Cuerpo de acero inoxidable, articulaciones de goma flexible, base de metal.**



9062, 9058 - Periscopio, Floor



9062, 9058 - Periscopio, Floor



9057 - Periscopio, Table/Clamp



9056 - Periscopio, Table/Clamp



9056 - Periscopio, Table/Clamp

Quad stands out for its pure and rigorous form, where two square volumes merge elegantly into a single structure with softened edges. A luminous object that balances geometric precision with visual softness. Aluminium module, polycarbonate diffuser.

Technical Specification Page 424 Download

**IT Quad si distingue per la sua forma pura e rigorosa, dove due volumi quadrati si fondono con eleganza in un'unica struttura dalle linee raccordate.
Un oggetto luminoso che coniuga precisione geometrica e morbidezza visiva.
Modulo in alluminio, diffusore in policarbonato.**

**FR Quad se distingue par sa forme pure et rigoureuse, où deux volumes carrés fusionnent avec élégance en une seule structure aux contours adoucis. Un objet lumineux qui conjugue précision géométrique et douceur visuelle.
Modules en aluminium, diffuseur en polycarbonate.**

**DE Quad besticht durch seine klare und präzise Form, in der sich zwei quadratische Volumen zu einer einzigen Struktur mit sanften Kanten vereinen. Ein Lichtobjekt, das geometrische Strenge mit visueller Leichtigkeit verbindet.
Modul aus Aluminium, Diffusor aus Polycarbonat.**

**ES Quad destaca por su forma pura y rigurosa, donde dos volúmenes cuadrados se funden elegantemente en una única estructura de líneas suavizadas. Un objeto luminoso que equilibra precisión geométrica y ligereza visual.
Módulo en aluminio, difusor en policarbonato.**



7753M - Quad, Wall

7750 - Quad, Wall



LAMP-CONCEPT.CH

Reflexio **Designed by Mirco Crosatto** **2018**

Reflexio is a large luminous disc that uses reflection to spread a soft, uniform glow, enveloping spaces with delicate, glare-free illumination. Metal body.

IF Design Award, Winner 2018

Technical Specification **Page 426** **Download**

**IT Reflexio è un ampio disco luminoso che sfrutta la riflessione per diffondere una luce soffusa e uniforme, avvolgendo lo spazio con un'illuminazione delicata e priva di abbagliamento.
Corpo in metallo.**

**FR Reflexio est un grand disque lumineux qui exploite la réflexion pour diffuser une lumière douce et uniforme, enveloppant l'espace d'une illumination délicate et sans éblouissement.
Corps en métal.**

**DE Reflexio ist eine große, leuchtende Scheibe, die Reflexion nutzt, um ein sanftes, gleichmäßiges Licht zu verbreiten und Räume mit blendfreier Beleuchtung zu umhüllen.
Korpus aus Metall.**

**ES Reflexio es un gran disco luminoso que utiliza la reflexión para difundir una luz suave y uniforme, envolviendo el espacio con una iluminación delicada y sin deslumbramiento.
Cuerpo en metal.**



8541M - Reflexio, Pendant



8532 - Reflexio, Wall/Ceiling



8541, 8536 - Reflexio, Pendant

Saliscendi is an adjustable pendant lamp with dual emission, capable of modulating direct and indirect light with a simple gesture. The luminous body and reflective disk slide along the cables in opposite directions, offering warm, dynamic and customizable lighting.
Body and disc in metal, diffusers in PMMA.

Technical Specification Page 428 Download

IT Saliscendi è una lampada a sospensione regolabile a doppia emissione, capace di modulare la luce diretta e indiretta con un semplice gesto. Il corpo luminoso e il disco riflettente scorrono lungo i cavi in movimento inverso, offrendo un'illuminazione calda, dinamica e personalizzabile.
Corpo e disco in metallo, diffusori in PMMA.

FR Saliscendi est une lampe à suspension réglable à double émission, capable de moduler la lumière directe et indirecte d'un simple geste. Le corps lumineux et le disque réfléchissant glissent le long des câbles en mouvement inverse, offrant un éclairage chaude, dynamique et personnalisable.
Corps et disque en métal, diffuseurs en PMMA.

DE Saliscendi ist eine höhenverstellbare Pendelleuchte mit doppeltseitigem Lichtaustritt, die mit einer einfachen Geste direktes und indirektes Licht moduliert. Der leuchtende Körper und die reflektierende Scheibe gleiten entgegengesetzt entlang der Kabel und bieten eine warme, dynamische und individuell anpassbare Beleuchtung. Korpus und Scheibe aus Metall, Diffusor aus PMMA.

ES Saliscendi es una lámpara colgante regulable con doble emisión, capaz de modular la luz directa e indirecta con un gesto sencillo.
El cuerpo luminoso y el disco reflector se deslizan a lo largo de los cables en movimiento inverso, ofreciendo una iluminación cálida, dinámica y personalizable.
Cuerpo y disco de metal, difusores de PMMA.



9311 - Saliscendi, Pendant



9310 - Saliscendi, Pendant



9311 - Saliscendi, Pendant

9312 - Saliscendi, Pendant





9313 - Saliscendi, Pendant



9313 - Saliscendi, Pendant

Sputnik **Designed by Stilnovo** **1957**

Sputnik illuminates the space with an extraordinary scenic presence, expanding in all directions like a luminous firework. A piece of furniture that transcends the mere lighting function, transforming into a suspended work of art capable of defining any environment with character. Brass body, metal lampholders.

Technical Specification **Page 430** **Download**

IT **Sputnik illumina lo spazio con una presenza scenica straordinaria, espandendosi in tutte le direzioni come un fuoco d'artificio luminoso. Un pezzo d'arredo che trascende la semplice funzione illuminotecnica, trasformandosi in un'opera d'arte sospesa, capace di definire con carattere qualsiasi ambiente. Corpo in ottone, portalampada in metallo.**

FR **Sputnik illumine l'espace avec une présence scénique extraordinaire, s'étendant dans toutes les directions comme un feu d'artifice lumineux. Un élément de mobilier qui transcende la simple fonction d'éclairage, se transformant en une œuvre d'art suspendue, capable de donner du caractère à n'importe quel environnement. Corps en laiton, douilles en métal.**

DE **Sputnik erleuchtet den Raum mit einer außergewöhnlichen Bühnenpräsenz und breitet sich in alle Richtungen aus wie ein leuchtendes Feuerwerk. Ein Möbelstück, das über die bloße Beleuchtungsfunktion hinausgeht und sich in ein schwebendes Kunstwerk verwandelt, das jedem Raum Charakter verleiht. Korpus aus Messing, Lampenfassungen aus Metall.**

ES **Sputnik ilumina el espacio con una presencia escénica extraordinaria, expandiéndose en todas las direcciones como un fuego artificial luminoso. Una pieza de mobiliario que trasciende la simple función de iluminación, transformándose en una obra de arte suspendida, capaz de definir con carácter cualquier ambiente. Cuerpo de latón, portalámparas metálicos.**



9590 - Sputnik, Pendant



9592 - Sputnik, Pendant



9591 - Sputnik, Pendant

9590 - Sputnik, Pendant



LAMP.CONCEPT.CH

Tablet **Designed by Mirco Crosatto** **2014**

Tablet is a collection of minimalist lamps designed to provide fully adjustable lighting. Its slim rectangular frame houses movable light sources, seamlessly blending into an essential and contemporary aesthetic. Aluminium body, opaline polycarbonate diffuser.

Tablet floor - Red Dot Design Award, Winner 2018

Technical Specification **Page 432** **Download**

IT Tablet è una collezione di lampade dal design minimale, pensata per offrire una luce direzionabile con la massima libertà. Il sottile telaio rettangolare racchiude sorgenti luminose orientabili, che si integrano perfettamente in un'estetica essenziale e contemporanea.
Corpo in alluminio, diffusore in policarbonato opalino.

FR Tablet est une collection de lampes minimalistes conçue pour offrir un éclairage entièrement ajustable. Son cadre rectangulaire fin abrite des sources lumineuses mobiles qui se fondent parfaitement dans une esthétique essentielle et contemporaine.
Corps en aluminium, diffuseur en polycarbonate opale.

DE Tablet ist eine Kollektion minimalistischer Lampen, die eine vollständig einstellbare Beleuchtung bietet. Der schlanke rechteckige Rahmen beherbergt bewegliche Lichtquellen, die sich nahtlos in eine essentielle und zeitgemäße Ästhetik einfügen.
Korpus aus Aluminium, Diffusor aus milchigem Polycarbonat.

ES Tablet es una colección de lámparas minimalistas diseñadas para ofrecer una iluminación completamente ajustable. Su delgado marco rectangular alberga fuentes de luz móviles, integrándose perfectamente en una estética esencial y contemporánea.
Cuerpo en aluminio, difusor en policarbonato opalino.



8451 - Tablet, Pendant



7607 - Tablet, Wall



8451 - Tablet, Pendant



8452 - Tablet, Floor



8452 - Tablet, Floor

Topo / Minitopo **Designed by Joe Colombo** **1970**

Topo and Minitopo embody the elegance of 1960s automotive design.
The slits on the shell are a tribute to the air intakes of sports cars, while the lampshade wraps around the bulb, creating a connection between industrial design and lighting.
Body and shell in metal, handle in heat-insulating material.

MoMA New York, Permanent Collection

Technical Specification **Page 436** Minitopo Topo **Download**

**IT Topo e Minitopo incarnano l'eleganza del design automobilistico anni '60.
Le fessure sulla calotta sono un omaggio alle prese d'aria delle auto sportive, mentre il paralume avvolge la lampadina creando una connessione tra il design industriale e l'illuminazione.
Corpo e calotta in metallo, impugnatura in materiale termoisolante.**

**FR Topo et Minitopo incarnent l'élégance du design automobile des années 60.
Les fentes sur la calotte rendent hommage aux prises d'air des voitures de sport, tandis que l'abat-jour enveloppe l'ampoule, créant un lien entre design industriel et éclairage.
Corps et calotte en métal, poignée en matériau isolant thermique.**

**DE Topo und Minitopo verkörpern die Eleganz des Automobildesigns der 1960er Jahre. Die Schlitze in der Haube sind eine Hommage an die Lufteinlässe von Sportwagen, während der Lampenschirm die Glühbirne umhüllt und so eine Verbindung zwischen Industriedesign und Beleuchtung schafft.
Gehäuse und Haube aus Metall, Griff aus wärmeisolierendem Material.**

ES Topo y Minitopo encarnan la elegancia del diseño automovilístico de los años 60. Las ranuras en la carcasa son un homenaje a las tomas de aire de los coches deportivos, mientras que la pantalla envuelve la bombilla creando una conexión entre el diseño industrial y la iluminación. Cuerpo y carcasa de metal, empuñadura de material termoaislante.



9069 - Minitopo, Table



9065 - Minitopo, Table



9065, 9067 - Minitopo, Table



9083 - Topo, Floor



9083 - Topo, Floor



9074 - Topo, Clamp



9074 - Topo, Clamp



9077 - Topo, Table



9077 - Topo, Table

Torino **Designed by Shigeaki Asahara** **2024**

Torino is the new customisable aluminium reading lamp, designed by Shigeaki Asahara. The lamp body, composed of an articulated arm and an adjustable head, can be mounted on a solid round base, on a clamp, or on a bracket.
The family is completed by the wall or bedside version. Aluminium body, opal polycarbonate diffuser.

Technical Specification **Page 440** **Download**

**IT Torino è l'inedita lampada da lettura componibile disegnata da Shigeaki Asahara.
Il corpo lampada, composto da un braccio articolato e da una testa orientabile, può essere montato su una solida base rotonda, su morsetto o su staffa.
Completa la famiglia la versione a parete o testaletto.
Corpo in alluminio, diffusore in policarbonato opalino.**

**FR Torino est la nouvelle lampe de lecture modulable conçue par Shigeaki Asahara. Le corps de la lampe, composé d'un bras articulé et d'une tête orientable, peut être installé sur une base ronde solide, sur un serre-joint ou sur un support. La famille est complétée par la version murale ou tête de lit.
Corps en aluminium, diffuseur en polycarbonate opalin.**

**DE Torino ist die neuartige modulare Leselampe, entworfen von Shigeaki Asahara. Der Lampenkörper, bestehend aus einem Gelenkarm und einem schwenkbaren Kopf, kann auf einer stabilen runden Basis, mit Klemme oder mit Halterung montiert werden. Ergänzt wird die Familie durch die Wand- bzw. Nachttischversion.
Korpus aus Aluminium, Diffusor aus opalem Polycarbonat.**

**ES Torino es la innovadora lámpara de lectura modular diseñada por Shigeaki Asahara. El cuerpo de la lámpara, compuesto por un brazo articulado y una cabeza orientable, puede montarse sobre una base redonda sólida, en una mordaza o en un soporte.
La familia se completa con la versión de pared o cabecero.
Cuerpo de aluminio, difusor de policarbonato opalino.**



CZ003IBBMDI + CZ004RBBEZZ - Torino, Table



CZ003IGBMDI + CZ006RGBEZZ - Torino, Wall



CZ003IBBMDI + CZ004RBBEZZ - Torino, Table



CZ151IBBMDI - Torino, Wall



CZ151IBBMDI - Torino, Wall



CZ003ILUMDI + CZ004RLUEZZ - Torino, Table



CZ003IWHMDI + CZ004RWHEZZ - Torino, Table



CZ003IWHMDI + CZ006RWHEZZ - Torino, Clamp



CZ003IBEMDI + CZ005RBEEZZ - Torino, Clamp

Trepiù **Designed by Gae Aulenti, Livio Castiglioni** **1972**

Trepiù is a pendant lamp with a timeless charm, capable of evoking retro atmospheres while maintaining remarkable modernity. Born in an era of bold stylistic experimentation, today it illuminates without ever causing glare, thanks to the LED source hidden from view. Upper shell in plastic material, dome in aluminum.

Technical Specification **Page 444** **Download**

IT Trepiù è una lampada a sospensione dal fascino intramontabile, capace di evocare atmosfere rétro pur mantenendo una straordinaria attualità. Nata in un'epoca di grande sperimentazione stilistica, oggi illumina senza mai abbagliare grazie alla sorgente LED nascosta alla vista.
Calotta superiore in materiale plastico, cupola in alluminio.

FR Trepiù est une suspension au charme intemporel, capable d'évoquer des atmosphères rétro tout en conservant une étonnante modernité.
Née à une époque de grande expérimentation stylistique, elle éclaire aujourd'hui sans jamais éblouir grâce à la source LED dissimulée à la vue.
Calotte supérieure en matériau plastique, dôme en aluminium.

DE Trepiù ist eine Pendelleuchte mit zeitlosem Charme, die nostalgische Retro-Atmosphären heraufbeschwören kann, während sie gleichzeitig eine bemerkenswerte Modernität bewahrt. In einer Zeit großer stilistischer Experimente entstanden, beleuchtet sie heute, ohne je zu blenden, dank der LED-Lichtquelle, die dem Blick verborgen bleibt.
Obere Kalotte aus Kunststoff, Kuppel aus Aluminium.

ES Trepiù es una lámpara de suspensión de encanto atemporal, capaz de evocar atmósferas retro sin renunciar a una sorprendente modernidad. Nacida en una época de gran experimentación estilística, hoy ilumina sin deslumbrar jamás gracias a la fuente LED oculta a la vista.
Calota superior de material plástico, cúpula de aluminio.



9305M - Trepiù, Pendant



9306, 9307, 9308 - Trepiù, Pendant



9305M - Trepiù, Pendant

Triedro **Designed by Joe Colombo** **1970**

Triedro expresses the functional elegance of Italian design, with an aesthetic that looks both to photographic set lighting and to floral environments. Designed with a perfect balance between joint engineering and reflected light, this family represents a seamless fusion of form and function. Reflector and lampholder in metal.

Technical Specification **Page 446** **Download**

IT Triedro esprime l'eleganza funzionale del design italiano, con un'estetica che volge lo sguardo sia alle lampade dei set fotografici che agli ambienti floreali. Progettata con un equilibrio perfetto tra ingegneria degli snodi e luce riflessa, questa famiglia rappresenta un connubio perfetto tra forma e funzione. Riflettori e portalampada in metallo.

FR Triedro exprime l'élégance fonctionnelle du design italien, avec une esthétique qui s'inspire autant des lampes des plateaux photographiques que des environnements floraux. Conçue avec un équilibre parfait entre l'ingénierie des articulations et la lumière réfléchie, cette famille représente une fusion idéale entre forme et fonction. Réflecteur et douilles en métal.

DE Triedro verkörpert die funktionale Eleganz des italienischen Designs und vereint eine Ästhetik, die an Fotostudiolampen ebenso erinnert wie an florale Formen. Mit einem perfekten Zusammenspiel von Gelenktechnik und reflektiertem Licht steht diese Familie für die ideale Verbindung von Form und Funktion. Reflektor und Lampenfassung aus Metall.

ES Triedro expresa la elegancia funcional del diseño italiano, con una estética que mira tanto a las lámparas de los sets fotográficos como a los entornos florales. Diseñada con un equilibrio perfecto entre la ingeniería de las articulaciones y la luz reflejada, esta familia representa una combinación ideal de forma y función. Reflectores y portalámparas de metal.



8995 - Triedro, Pendant



8993 - Triedro, Wall



8995 - Triedro, Pendant



8994 - Triedro, Floor



8994 - Triedro, Floor



8992 - Triedro, Wall

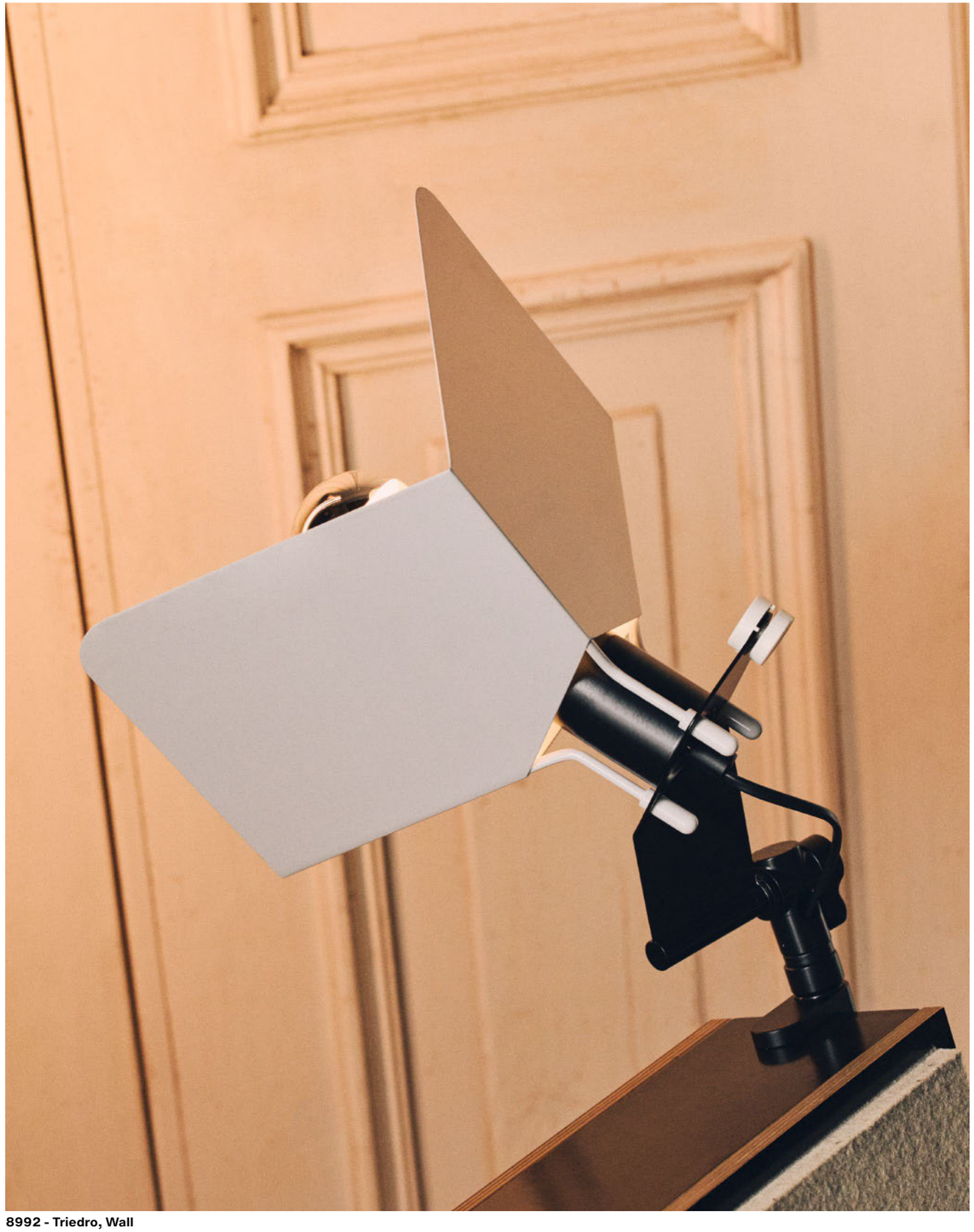

8992 - Triedro, Wall

Valigia **Designed by Ettore Sottsass** **1977**

Valigia is a direct expression of the strong experimentation with materials, techniques and forms typical of Sottsass and the Counter Design movement, openly challenging the style and common taste of its era. A lamp that has become a timeless icon, redefining the very idea of a luminous object. Supporting structure and lamp body in metal.

Technical Specification **Page 450** **Download**

IT Valigia è espressione diretta del forte sperimentalismo di materiali, tecniche e forme tipico di Sottsass e del Contro Design, in aperta critica verso lo stile e il gusto comune dell'epoca.
Una lampada divenuta icona senza tempo, che ridefinisce l'idea stessa di oggetto luminoso.
Struttura portante e corpo lampada in metallo.

FR Valigia est l'expression directe du fort expérimentation des matériaux, des techniques et des formes typique de Sottsass et du Contre-Design, en critique ouverte du style et du goût communs de l'époque.
Une lampe devenue une icône intemporelle, qui redéfinit l'idée même d'objet lumineux.
Structure porteuse et corps de lampe en métal.

DE Valigia ist ein Ausdruck des starken Experimentierens mit Materialien, Techniken und Formen, das Sottsass und den Counter-Design prägte und den damaligen Mainstream-Geschmack offen kritisierte. Eine Leuchte, die zur zeitlosen Ikone wurde und die Idee des leuchtenden Objekts neu definiert.
Tragstruktur und Lampenkörper aus Metall.

ES Valigia es una expresión directa del fuerte experimentalismo en materiales, técnicas y formas típico de Sottsass y del Counter-Design, en abierta crítica al estilo y al gusto común de la época. Una lámpara convertida en un icono atemporal, que redefine la propia idea de objeto luminoso.
Estructura portante y cuerpo de la lámpara en metal.



8960 - Valigia, Table

8960 - Valigia, Table



LAMP-CONCEPT.CH

Xilema is an exercise in formal subtraction, an essential yet sophisticated luminous presence. Its slim, elegant profile defines spaces with weightless precision, enhancing the interplay between light and architecture in perfect harmony.
Aluminium body, PMMA diffuser.

Technical Specification Page 452 Download

**IT Xilema è un esercizio di sottrazione formale, una presenza luminosa essenziale e sofisticata. Il suo profilo sottile ed elegante definisce lo spazio con leggerezza, esaltando il rapporto tra luce e architettura in un equilibrio perfetto.
Corpo in alluminio, diffusore in PMMA.**

**FR Xilema est un exercice de dépouillement formel, une présence lumineuse à la fois essentielle et sophistiquée. Son profil fin et élégant structure l'espace avec légèreté, sublimant l'équilibre entre lumière et architecture.
Corps en aluminium, diffuseur en PMMA.**

DE Xilema ist eine Studie der formalen Reduktion – eine leuchtende Präsenz, die sowohl essentiell als auch raffiniert ist. Sein schlankes, elegantes Profil definiert Räume mit Leichtigkeit und schafft eine perfekte Balance zwischen Licht und Architektur. Korpus aus Aluminium, Diffusor aus PMMA.

**ES Xilema es un ejercicio de reducción formal, una presencia luminosa esencial y sofisticada.
Su perfil delgado y elegante define el espacio con ligereza, realzando la armonía entre la luz y la arquitectura.
Cuerpo en aluminio, difusor en PMMA.**



7767, 7766 - Xilema, Wall

Much more than just a lamp: it's a refined design object that combines aesthetics and technology. Its rotatable and adjustable cylinder provides precise and comfortable lighting, perfect for a headboard or a reading corner. Alternatively, it can decorate the wall with multiple light and shadow effects. Body and cylinder made of aluminum.

Red Dot Design Award, Winner 2016

Technical Specification Page 454 Download

IT Molto più di una semplice lampada: è un raffinato oggetto di design che combina estetica e tecnologia. Il suo cilindro ruotabile e orientabile offre un'illuminazione precisa e confortevole, perfetta per la testiera del letto o un angolo lettura. In alternativa, può decorare la parete con molteplici effetti di luci e ombre.
Corpo e cilindro in alluminio.

FR Bien plus qu'une simple lampe : c'est un objet de design raffiné qui allie esthétique et technologie. Son cylindre rotatif et orientable offre un éclairage précis et confortable, parfait pour une tête de lit ou un coin lecture. Il peut également décorer le mur avec de multiples jeux de lumière et d'ombre. Corps et cylindre en aluminium.

DE Viel mehr als nur eine einfache Lampe: ein elegantes Designobjekt, das Ästhetik und Technologie vereint. Der dreh- und schwenkbare Zylinder bietet eine präzise und angenehme Beleuchtung – ideal für das Kopfteil des Bettes oder eine Leseecke. Alternativ kann er die Wand mit vielfältigen Licht- und Schatteneffekten schmücken. Gehäuse und Zylinder aus Aluminium.

ES Mucho más que una simple lámpara: es un refinado objeto de diseño que combina estética y tecnología. Su cilindro giratorio y orientable ofrece una iluminación precisa y confortable, perfecta para el cabecero de la cama o un rincón de lectura. También puede decorar la pared con múltiples efectos de luces y sombras.
Cuerpo y cilindro de aluminio.



8638 - 1Night, Wall



7945 + KIT0036 - 2Nights, Wall



7945 - 2Nights, Wall

Technical Specifications

Bascula **Pendant**

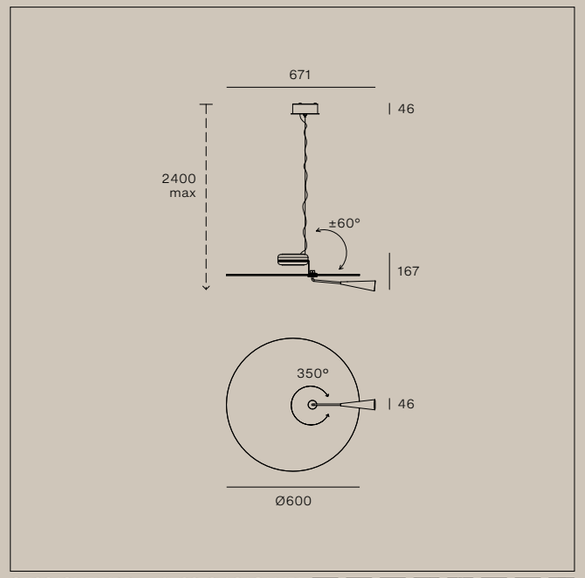

CZ001CHZWDD
CZ001CHZMDD
CZ001CKWWDD
CZ001CKWMDD
CZ001CKGWDD
CZ001CKGMDD
CZ001CRHWDD
CZ001CRHMDD

KIT0079 / CASAMBI
DALI / 1 art / out

Bascula, Pendant

Code	Finish	Source	Input	Dimming	CCT (K)	Lm D	CRI	IP	Optic
CZ001CHZWDD	Brushed Bronze	TopLED 26W	220-240V	DALI Push	3000	2650	90	20	Diffused
CZ001CHZMDD	Brushed Bronze	TopLED 26W	220-240V	DALI Push	2700	2477	90	20	Diffused
CZ001CKWWDD	Text. White - Brushed Nickel	TopLED 26W	220-240V	DALI Push	3000	2650	90	20	Diffused
CZ001CKWMDD	Text. White - Brushed Nickel	TopLED 26W	220-240V	DALI Push	2700	2477	90	20	Diffused
CZ001CKGWDD	Text. Grey - Brushed Nickel	TopLED 26W	220-240V	DALI Push	3000	2650	90	20	Diffused
CZ001CKGMDD	Text. Grey - Brushed Nickel	TopLED 26W	220-240V	DALI Push	2700	2477	90	20	Diffused
CZ001CRHWDD	Text. Red Iconic - Brushed Black Nickel	TopLED 26W	220-240V	DALI Push	3000	2650	90	20	Diffused
CZ001CRHMDD	Text. Red Iconic - Brushed Black Nickel	TopLED 26W	220-240V	DALI Push	2700	2477	90	20	Diffused

Bugia Wall

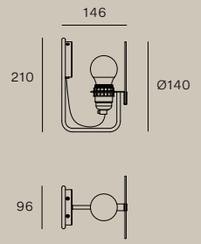

9686 **Included bulb**
9687 Sfera Full Light
9688 LED Bulb E27 4,5W
9689
9690



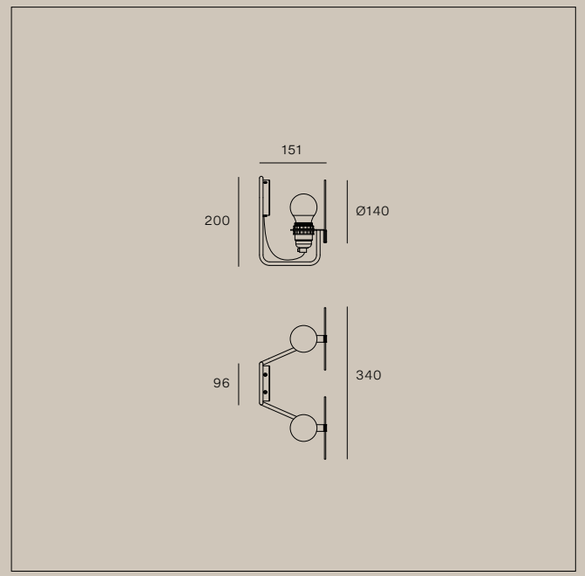

9692 **Included bulb**
9693 Sfera Full Light
9694 LED Bulb E27 4,5W
9695
9696

Bugia, Wall

Code	Finish	Source	Input	Dimming	CCT (K)	Lm D	CRI	IP	Optic
9686	Polished Pure White	1xE27 4,5W	220-240V	No	2700	470	≥80	20	Diffused
9687	Polished Black	1xE27 4,5W	220-240V	No	2700	470	≥80	20	Diffused
9688	Polished Mint Green	1xE27 4,5W	220-240V	No	2700	470	≥80	20	Diffused
9689	Polished Red	1xE27 4,5W	220-240V	No	2700	470	≥80	20	Diffused
9690	Polished Signal Yellow	1xE27 4,5W	220-240V	No	2700	470	≥80	20	Diffused
9692	Polished Pure White	2xE27 4,5W	220-240V	No	2700	940	≥80	20	Diffused
9693	Polished Black	2xE27 4,5W	220-240V	No	2700	940	≥80	20	Diffused
9694	Polished Mint Green	2xE27 4,5W	220-240V	No	2700	940	≥80	20	Diffused
9695	Polished Red	2xE27 4,5W	220-240V	No	2700	940	≥80	20	Diffused
9696	Polished Signal Yellow	2xE27 4,5W	220-240V	No	2700	940	≥80	20	Diffused

Bugia Table

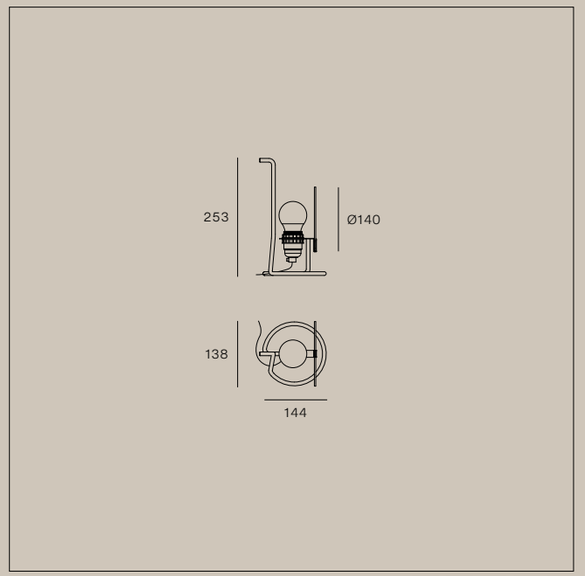

9680 **Included bulb**
9681 Sfera Full Light
9682 LED Bulb E27 4,5W
9683
9684

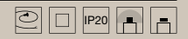

Bugia, Table

Code	Finish	Source	Input	Dimming	CCT (K)	Lm D	CRI	IP	Optic
9680	Polished Pure White	1xE27 4,5W	220-240V	No	2700	470	≥80	20	Diffused
9681	Polished Black	1xE27 4,5W	220-240V	No	2700	470	≥80	20	Diffused
9682	Polished Mint Green	1xE27 4,5W	220-240V	No	2700	470	≥80	20	Diffused
9683	Polished Red	1xE27 4,5W	220-240V	No	2700	470	≥80	20	Diffused
9684	Polished Signal Yellow	1xE27 4,5W	220-240V	No	2700	470	≥80	20	Diffused

Buonanotte **Table**

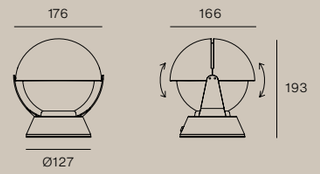

8961 **Included bulb**
8962 Classic P Retrofit
8963 LED Bulb E14 4W
8964

IP20

Buonanotte, Table

Code	Finish	Source	Input	Dimming	CCT (K)	Lm D	CRI	IP	Optic
8961	Polished Pure White	1xE14 4W	220-240V	No	2700	259	≥80	20	Diffused
8962	Polished Red	1xE14 4W	220-240V	No	2700	259	≥80	20	Diffused
8963	Polished Signal Yellow	1xE14 4W	220-240V	No	2700	259	≥80	20	Diffused
8964	Polished Deep Blue	1xE14 4W	220-240V	No	2700	259	≥80	20	Diffused

Campana **Pendant**

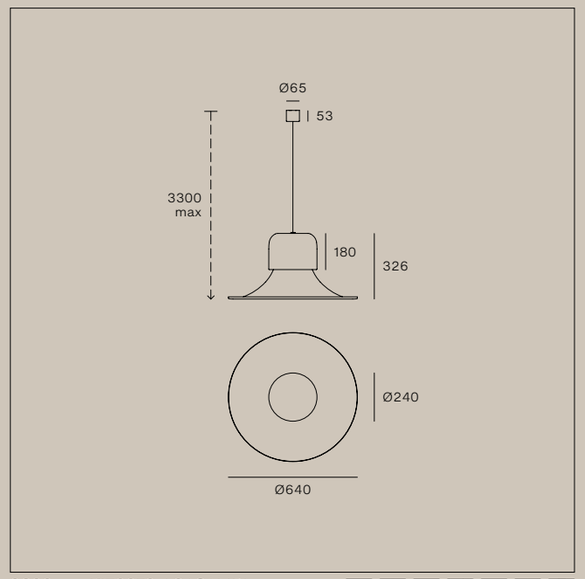

9300
9301
9302

KIT0079 / CASAMBI
DALI / 1 art / out

Campana, Pendant

Code	Finish	Source	Input	Dimming	CCT (K)	Lm D	CRI	IP	Optic
9300	Polished Limestone	TopLED 31W	220-240V	DALI Push	2700	1848	90	20	Diffused
9301	Polished Red	TopLED 31W	220-240V	DALI Push	2700	1848	90	20	Diffused
9302	Polished Limestone - Brushed Aluminium	TopLED 31W	220-240V	DALI Push	2700	1848	90	20	Diffused

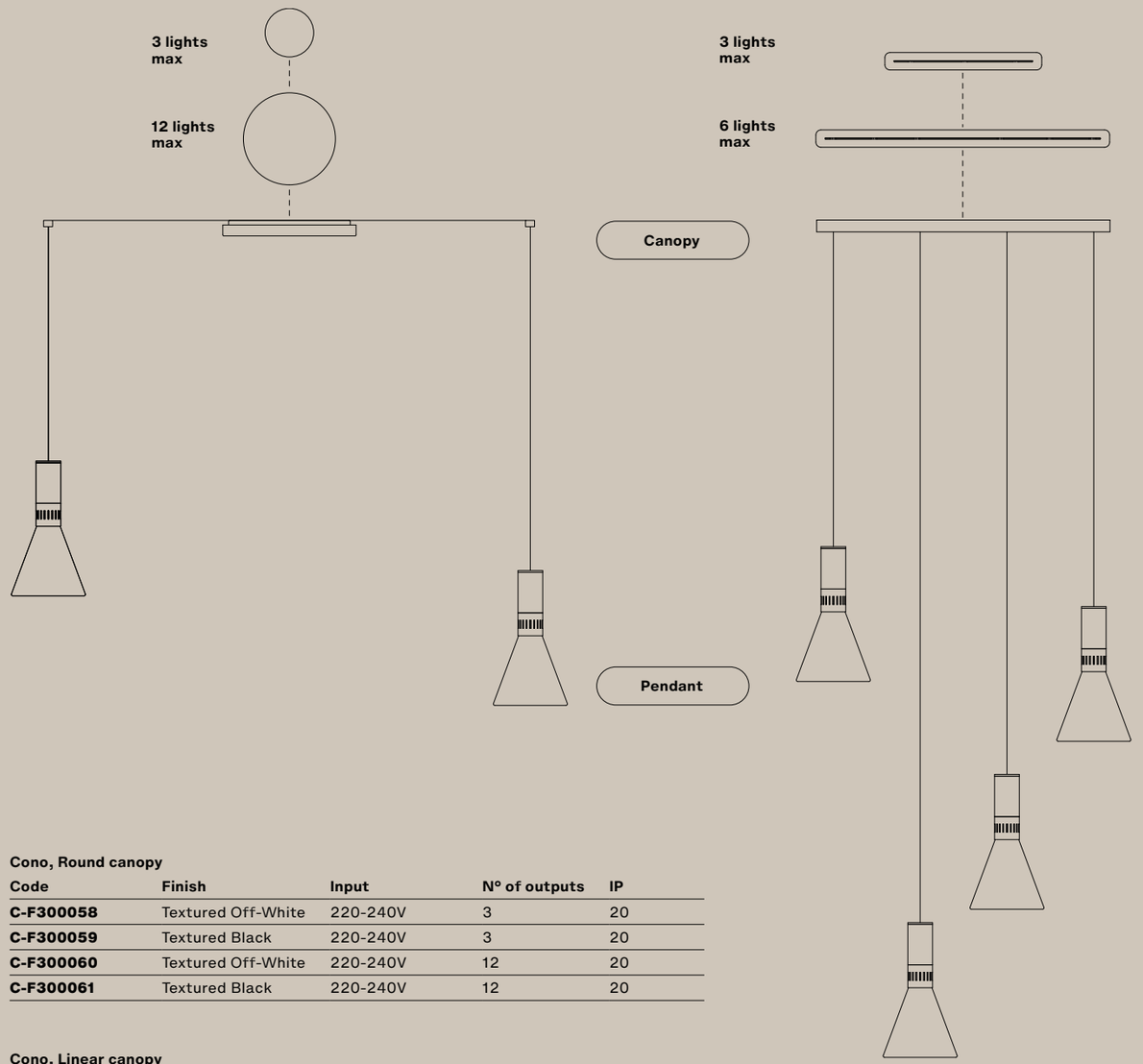

Cono, Round canopy

Code	Finish	Input	N° of outputs	IP
C-F300058	Textured Off-White	220-240V	3	20
C-F300059	Textured Black	220-240V	3	20
C-F300060	Textured Off-White	220-240V	12	20
C-F300061	Textured Black	220-240V	12	20

Cono, Linear canopy

Code	Finish	Input	N° of outputs	IP
C-F300062	Textured Off-White	220-240V	3	20
C-F300063	Textured Black	220-240V	3	20
C-F300064	Textured Off-White	220-240V	6	20
C-F300065	Textured Black	220-240V	6	20

Cono, Cable offset kit

Code	Finish
C-F300077	Matt Black

Cono, Pendant - single light for compositions

Code	Finish	Source	Input	Dimming	CCT (K)	Lm D	CRI	IP	Optic
CZ146DVDMDI	Satin Gold	1xE27 14W	220-240V	Phase-cut	2700	1164	≥80	20	Diffused
CZ146DVBMDI	Satin Black Nickel	1xE27 14W	220-240V	Phase-cut	2700	1164	≥80	20	Diffused
CZ146DWWMDI	Textured Off-White	1xE27 14W	220-240V	Phase-cut	2700	1164	≥80	20	Diffused

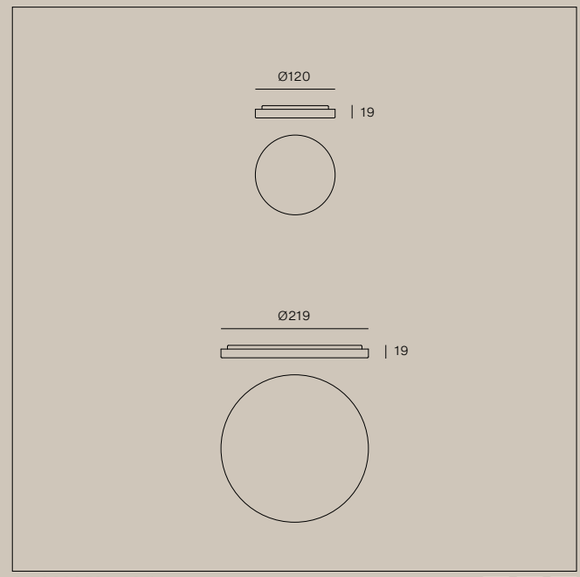

C-F300058 3 lights max
C-F300059 12 lights max
C-F300060
C-F300061

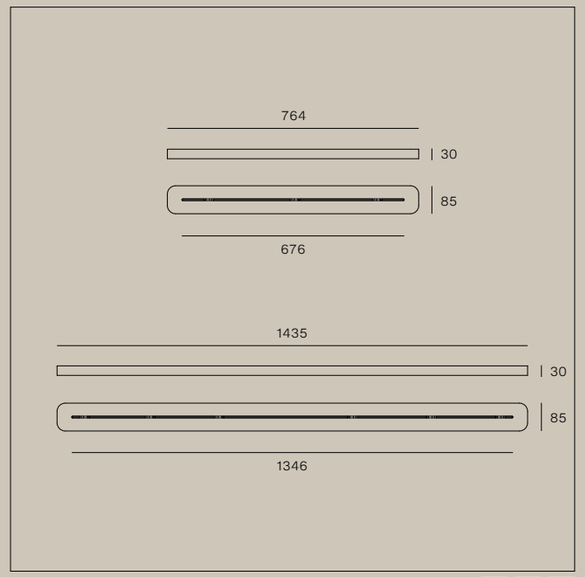

C-F300062 3 lights max
C-F300063
C-F300064 6 lights max
C-F300065

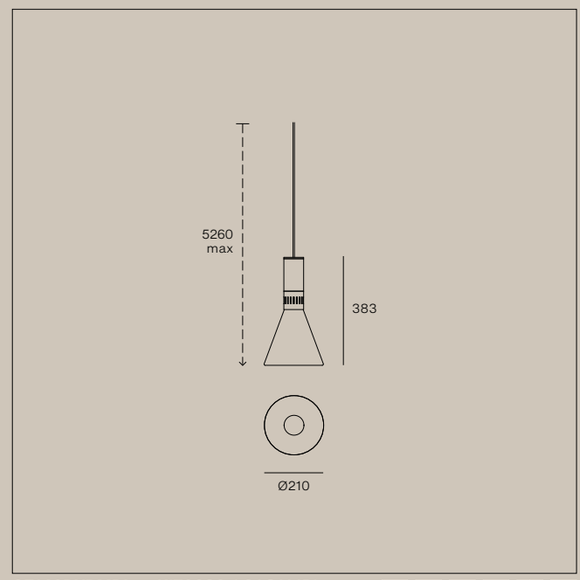

CZ146DVDMDI **KIT0080** / CASAMBI
CZ146DVBMDI PH-CUT / 1 art / out
CZ146DWWMDI **KIT0026**
PH-CUT / 1-7 art

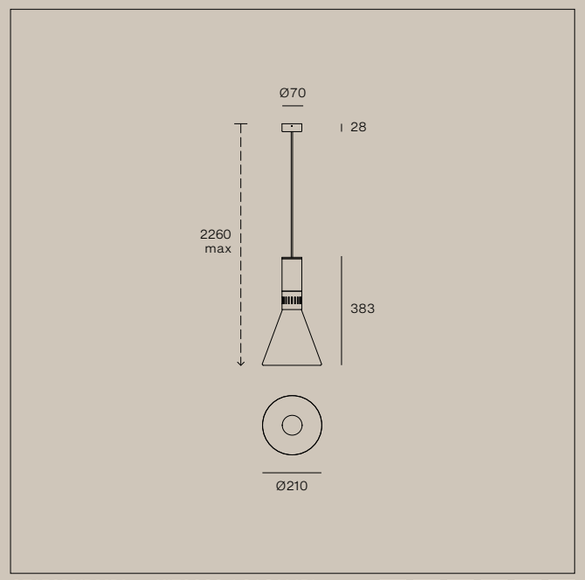

CZ150DVDMDI **KIT0080** / CASAMBI
CZ150DVBMDI PH-CUT / 1 art / out
CZ150DWWMDI **KIT0026**
PH-CUT / 1-7 art

Cono, Pendant - single light (stand alone)

Code	Finish	Source	Input	Dimming	CCT (K)	Lm D	CRI	IP	Optic
CZ150DVDMDI	Satin Gold	1xE27 14W	220-240V	Phase-cut	2700	1164	≥80	20	Diffused
CZ150DVBMDI	Satin Black Nickel	1xE27 14W	220-240V	Phase-cut	2700	1164	≥80	20	Diffused
CZ150DWWMDI	Textured Off-White	1xE27 14W	220-240V	Phase-cut	2700	1164	≥80	20	Diffused

Cono

Pendant

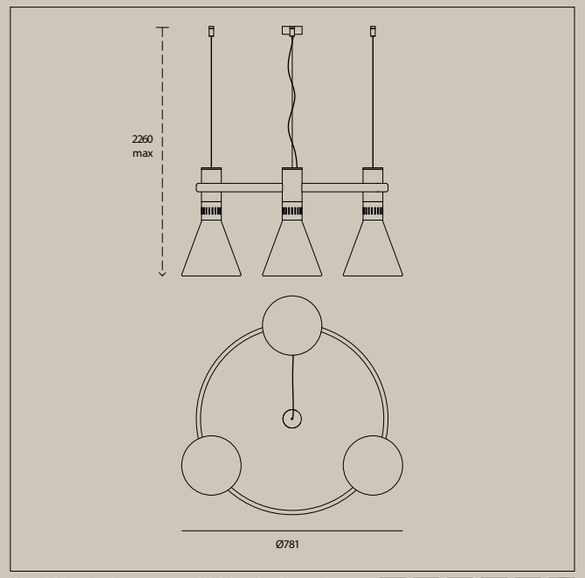

CZ148DVDMDI
CZ148DVBMDI
CZ148DWWMDI

KIT0080 / CASAMBI
PH-CUT / 1 art / out
KIT0026
PH-CUT / 1-2 art

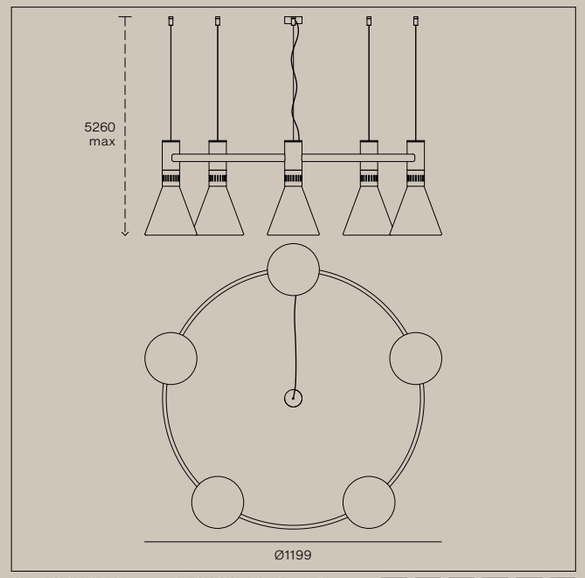

CZ149DVDMDI
CZ149DVBMDI
CZ149DWWMDI

KIT0080 / CASAMBI
PH-CUT / 1 art / out
KIT0026
PH-CUT / 1 art

Cono, Pendant

Code	Finish	Source	Input	Dimming	CCT (K)	Lm D	CRI	IP	Optic
CZ148DVDMDI	Satin Gold	3xE27 14W	220-240V	Phase-cut	2700	3491	≥80	20	Diffused
CZ148DVBMDI	Satin Black Nickel	3xE27 14W	220-240V	Phase-cut	2700	3491	≥80	20	Diffused
CZ148DWWMDI	Textured Off-White	3xE27 14W	220-240V	Phase-cut	2700	3491	≥80	20	Diffused
CZ149DVDMDI	Satin Gold	5xE27 14W	220-240V	Phase-cut	2700	5818	≥80	20	Diffused
CZ149DVBMDI	Satin Black Nickel	5xE27 14W	220-240V	Phase-cut	2700	5818	≥80	20	Diffused
CZ149DWWMDI	Textured Off-White	5xE27 14W	220-240V	Phase-cut	2700	5818	≥80	20	Diffused

Cono

Wall

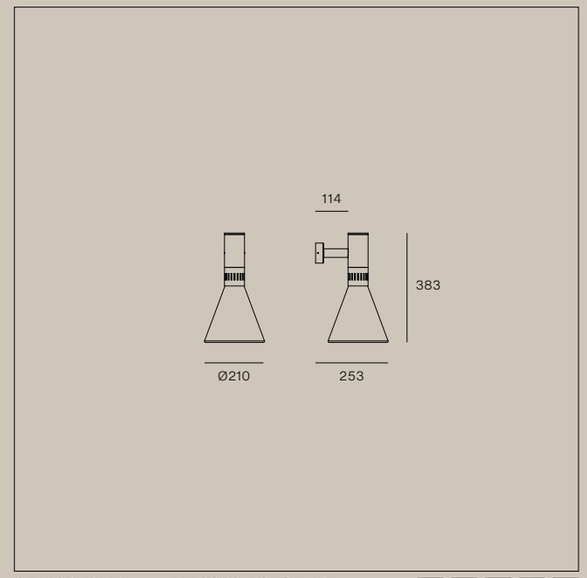

CZ142DVDMDI
CZ142DVBMDI
CZ142DWWMDI

KIT0080 / CASAMBI
PH-CUT / 1 art / out
KIT0026
PH-CUT / 1-7 art

Cono, Wall

Code	Finish	Source	Input	Dimming	CCT (K)	Lm D	CRI	IP	Optic
CZ142DVDMDI	Satin Gold	1xE27 14W	220-240V	Phase-cut	2700	1164	≥80	20	Diffused
CZ142DVBMDI	Satin Black Nickel	1xE27 14W	220-240V	Phase-cut	2700	1164	≥80	20	Diffused
CZ142DWWMDI	Textured Off-White	1xE27 14W	220-240V	Phase-cut	2700	1164	≥80	20	Diffused

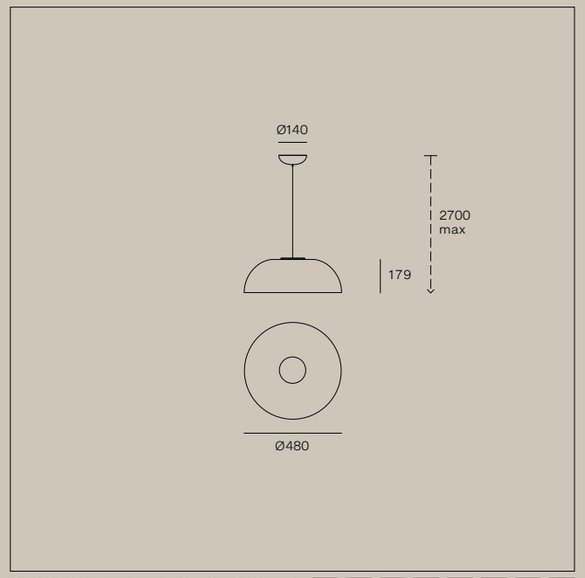

CZ045CWHWDI **KIT0079** / CASAMBI
CZ045CWHMDI DALI / 1 art / in

CZ045DWHWDI **KIT0080** / CASAMBI
CZ045DWHMDI PH-CUT / 1 art / in
KIT0026
PH-CUT / 1-5 art

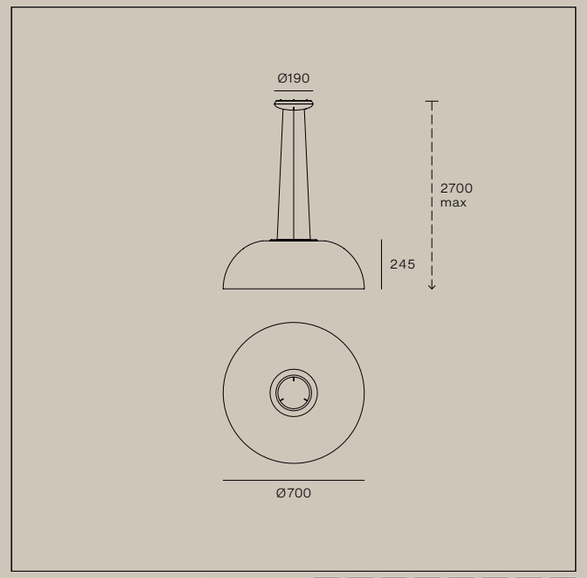

8890 **KIT0079** / CASAMBI
8890M DALI / 1 art / in

8892 **KIT0080** / CASAMBI
8892M PH-CUT / 1 art / in
KIT0026
PH-CUT / 1-3 art

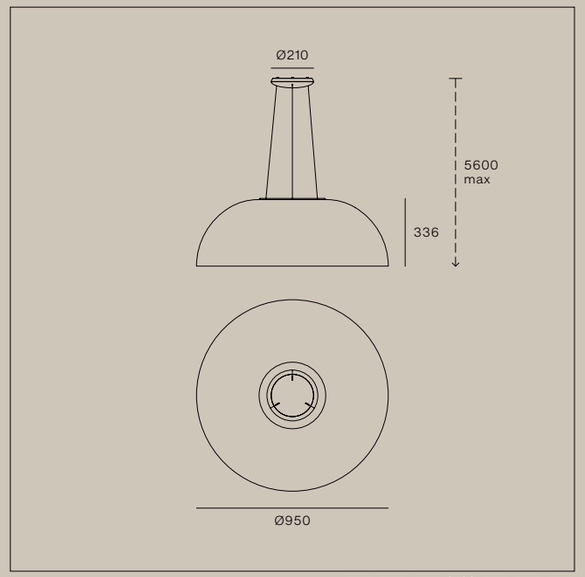

8891 **KIT0079** / CASAMBI
8891M DALI / 1 art / in



8894 **KIT0079** / CASAMBI
8894M DALI / 1 art / in

8893 **KIT0080** / CASAMBI
8893M PH-CUT / 1 art / in
KIT0026
PH-CUT / 1-3 art

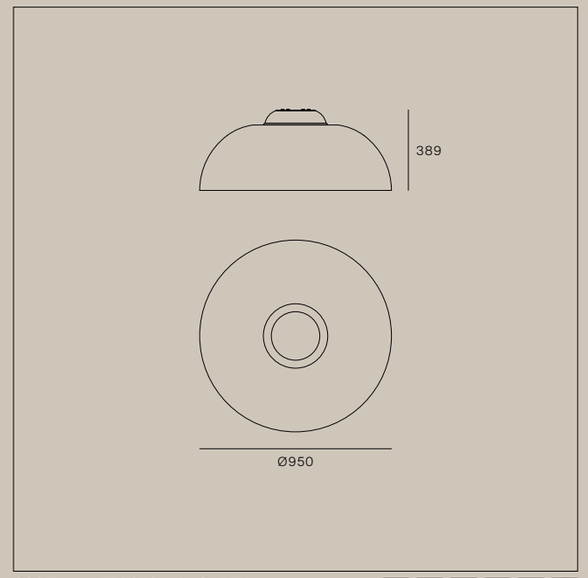

8895 **KIT0079 / CASAMBI**
8895M DALI / 1 art / in

Demì, Pendant

Code	Finish	Source	Input	Dimming	CCT (K)	Lm D	CRI	IP	Optic
CZ045CWHWDI	Text. White - Transp. PMMA	TopLED 18W	220-240V	DALI Push	3000	992	90	20	Diffused
CZ045CWHMDI	Text. White - Transp. PMMA	TopLED 18W	220-240V	DALI Push	2700	942	90	20	Diffused
CZ045DWHWDI	Text. White - Transp. PMMA	TopLED 18W	220-240V	Phase-cut	3000	992	90	20	Diffused
CZ045DWHMDI	Text. White - Transp. PMMA	TopLED 18W	220-240V	Phase-cut	2700	942	90	20	Diffused
8890	Text. White - Transp. PMMA	TopLED 37W	220-240V	DALI Push	3000	2051	90	20	Diffused
8890M	Text. White - Transp. PMMA	TopLED 37W	220-240V	DALI Push	2700	1908	90	20	Diffused
8892	Text. White - Transp. PMMA	TopLED 33W	220-240V	Phase-cut	3000	1815	90	20	Diffused
8892M	Text. White - Transp. PMMA	TopLED 33W	220-240V	Phase-cut	2700	1688	90	20	Diffused
8891	Text. White - Transp. PMMA	TopLED 55W	220-240V	DALI Push	3000	2998	90	20	Diffused
8891M	Text. White - Transp. PMMA	TopLED 55W	220-240V	DALI Push	2700	2788	90	20	Diffused

Demì, Ceiling

Code	Finish	Source	Input	Dimming	CCT (K)	Lm D	CRI	IP	Optic
8894	Text. White - Transp. PMMA	TopLED 37W	220-240V	DALI Push	3000	2051	90	40	Diffused
8894M	Text. White - Transp. PMMA	TopLED 37W	220-240V	DALI Push	2700	1908	90	40	Diffused
8893	Text. White - Transp. PMMA	TopLED 33W	220-240V	Phase-cut	3000	1815	90	40	Diffused
8893M	Text. White - Transp. PMMA	TopLED 33W	220-240V	Phase-cut	2700	1688	90	40	Diffused
8895	Text. White - Transp. PMMA	TopLED 55W	220-240V	DALI Push	3000	2998	90	40	Diffused
8895M	Text. White - Transp. PMMA	TopLED 55W	220-240V	DALI Push	2700	2788	90	40	Diffused

Demì Moon **Floor**

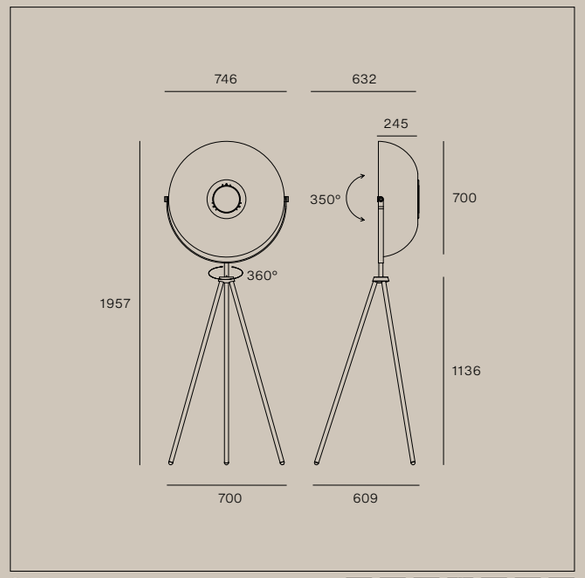

9775
9775M
9776
9776M

Demì Moon, Floor

Code	Finish	Source	Input	Dimming	CCT (K)	Lm D	CRI	IP	Optic
9775	Text. White - Transparent PMMA	TopLED 37W	220-240V	Push DIM	3000	2051	90	20	Diffused
9775M	Text. White - Transparent PMMA	TopLED 37W	220-240V	Push DIM	2700	1908	90	20	Diffused
9776	Text. Black - Transparent PMMA	TopLED 37W	220-240V	Push DIM	3000	2051	90	20	Diffused
9776M	Text. Black - Transparent PMMA	TopLED 37W	220-240V	Push DIM	2700	1908	90	20	Diffused

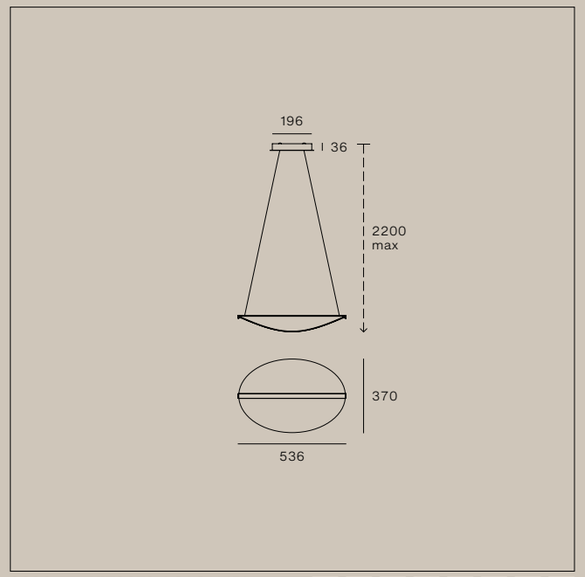

9090 **KIT0079** / CASAMBI
9090M DALI / 1 art / in

8172 **KIT0080** / CASAMBI
8172M PH-CUT / 1 art / in
KIT0026
PH-CUT / 1-4 art

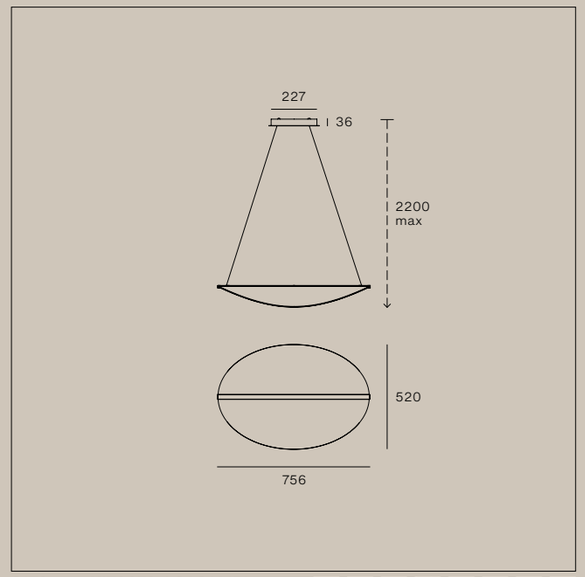

8170 **KIT0079** / CASAMBI
8170M DALI / 1 art / in

8173 **KIT0080** / CASAMBI
8173M PH-CUT / 1 art / in
KIT0026
PH-CUT / 1-2 art

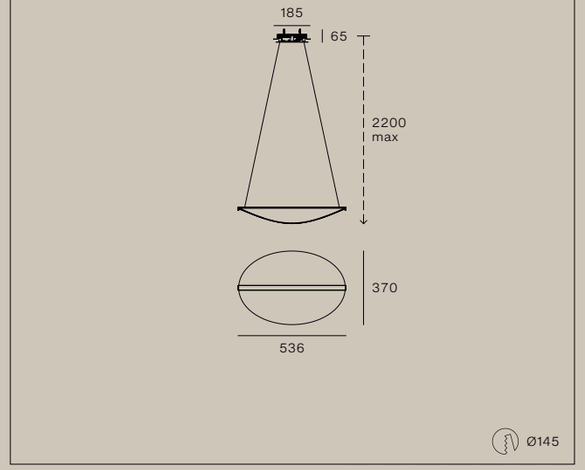

8174 **KIT0080** / CASAMBI
8174M PH-CUT / 1 art / in
KIT0026
PH-CUT / 1-4 art

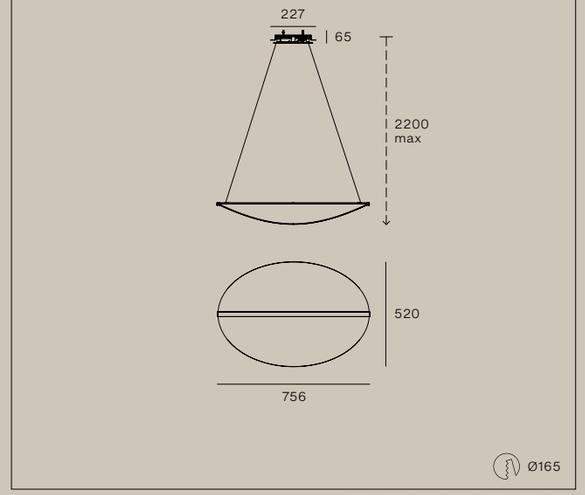

8171 **KIT0080** / CASAMBI
8171M PH-CUT / 1 art / in
KIT0026
PH-CUT / 1-2 art

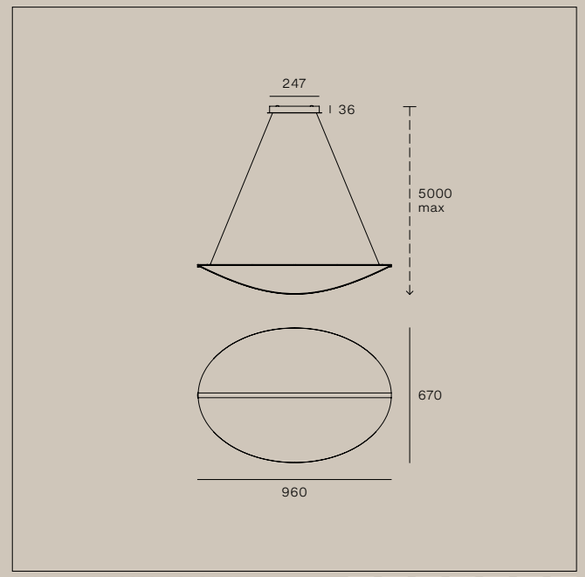

8169 **KIT0079** / CASAMBI
8169M DALI / 1 art / in

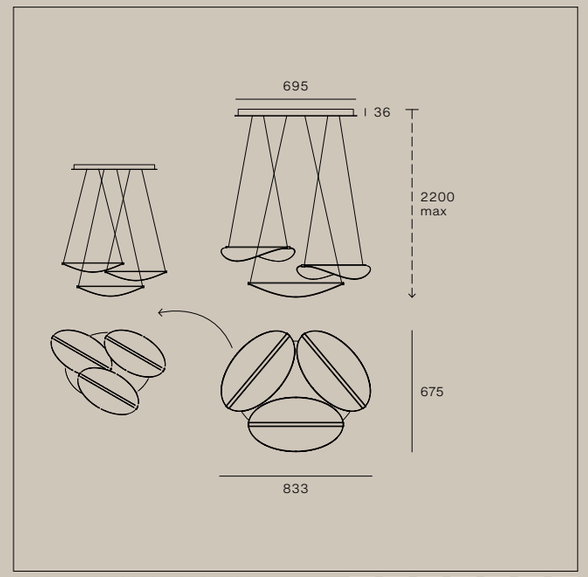

8168 **KIT0079** / CASAMBI
8168M DALI / 1 art / in

Diphy, Pendant

Code	Finish	Source	Input	Dimming	CCT (K)	Lm D	CRI	IP	Optic
9090	Text. White - Transparent PMMA	TopLED 24W	220-240V	DALI Push	3000	2003	90	20	Diffused
9090M	Text. White - Transparent PMMA	TopLED 24W	220-240V	DALI Push	2700	1863	90	20	Diffused
8172	Text. White - Transparent PMMA	TopLED 24W	220-240V	Phase-cut	3000	2003	90	20	Diffused
8172M	Text. White - Transparent PMMA	TopLED 24W	220-240V	Phase-cut	2700	1863	90	20	Diffused
8170	Text. White - Transparent PMMA	TopLED 40W	220-240V	DALI Push	3000	3526	90	20	Diffused
8170M	Text. White - Transparent PMMA	TopLED 40W	220-240V	DALI Push	2700	3279	90	20	Diffused
8173	Text. White - Transparent PMMA	TopLED 48W	220-240V	Phase-cut	3000	3736	90	20	Diffused
8173M	Text. White - Transparent PMMA	TopLED 48W	220-240V	Phase-cut	2700	3474	90	20	Diffused
8174	Text. White - Transparent PMMA	TopLED 24W	220-240V	Phase-cut	3000	2003	90	20	Diffused
8174M	Text. White - Transparent PMMA	TopLED 24W	220-240V	Phase-cut	2700	1863	90	20	Diffused
8171	Text. White - Transparent PMMA	TopLED 48W	220-240V	Phase-cut	3000	3736	90	20	Diffused
8171M	Text. White - Transparent PMMA	TopLED 48W	220-240V	Phase-cut	2700	3474	90	20	Diffused
8169	Text. White - Transparent PMMA	TopLED 54W	220-240V	DALI Push	3000	4760	90	20	Diffused
8169M	Text. White - Transparent PMMA	TopLED 54W	220-240V	DALI Push	2700	4427	90	20	Diffused
8168	Text. White - Transparent PMMA	TopLED 54W	220-240V	DALI Push	3000	5353	90	20	Diffused
8168M	Text. White - Transparent PMMA	TopLED 54W	220-240V	DALI Push	2700	4977	90	20	Diffused

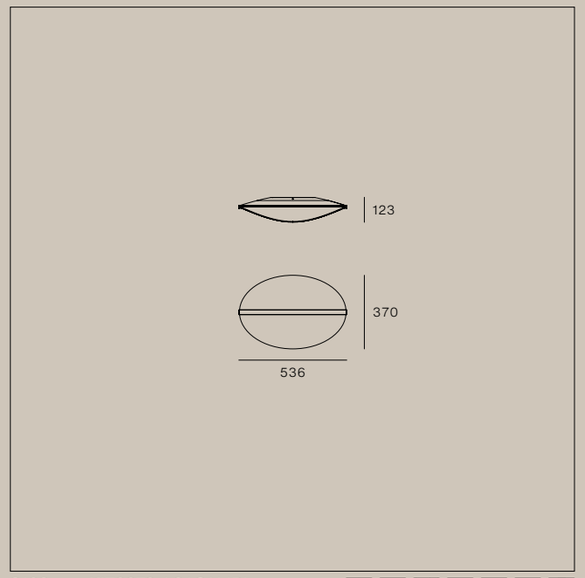

8163 **KIT0079** / CASAMBI
8163M DALI / 1 art / in

8166 **KIT0080** / CASAMBI
8166M PH-CUT / 1 art / in
KIT0026
PH-CUT / 1-4 art

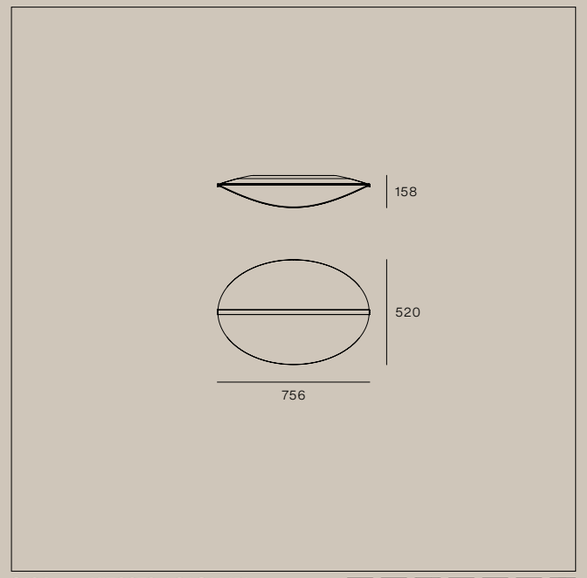

8164 **KIT0079** / CASAMBI
8164M DALI / 1 art / in

8167 **KIT0080** / CASAMBI
8167M PH-CUT / 1 art / in
KIT0026
PH-CUT / 1-2 art

Diphy, Wall/Ceiling

Code	Finish	Source	Input	Dimming	CCT (K)	Lm D	CRI	IP	Optic
8163	Text. White - Transparent PMMA	TopLED 24W	220-240 V	DALI Push	3000	2268	90	20	Diffused
8163M	Text. White - Transparent PMMA	TopLED 24W	220-240 V	DALI Push	2700	2107	90	20	Diffused
8166	Text. White - Transparent PMMA	TopLED 24W	220-240 V	Phase-cut	3000	2268	90	20	Diffused
8166M	Text. White - Transparent PMMA	TopLED 24W	220-240 V	Phase-cut	2700	2107	90	20	Diffused
8164	Text. White - Transparent PMMA	TopLED 40W	220-240 V	DALI Push	3000	4159	90	20	Diffused
8164M	Text. White - Transparent PMMA	TopLED 40W	220-240 V	DALI Push	2700	3867	90	20	Diffused
8167	Text. White - Transparent PMMA	TopLED 40W	220-240 V	Phase-cut	3000	4159	90	20	Diffused
8167M	Text. White - Transparent PMMA	TopLED 40W	220-240 V	Phase-cut	2700	3867	90	20	Diffused

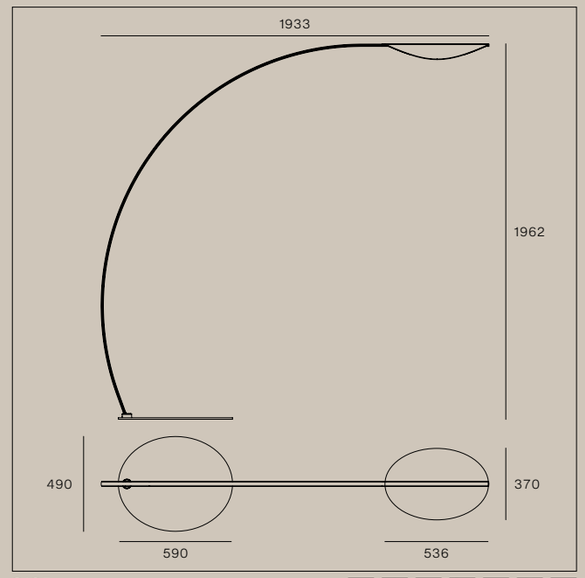

8165
8165M

Diphy, Floor

Code	Finish	Source	Input	Dimming	CCT (K)	Lm D	CRI	IP	Optic
8165	Text. White - Transparent PMMA	TopLED 30W	220-240 V	Push DIM	3000	2489	90	20	Diffused
8165M	Text. White - Transparent PMMA	TopLED 30W	220-240 V	Push DIM	2700	2315	90	20	Diffused

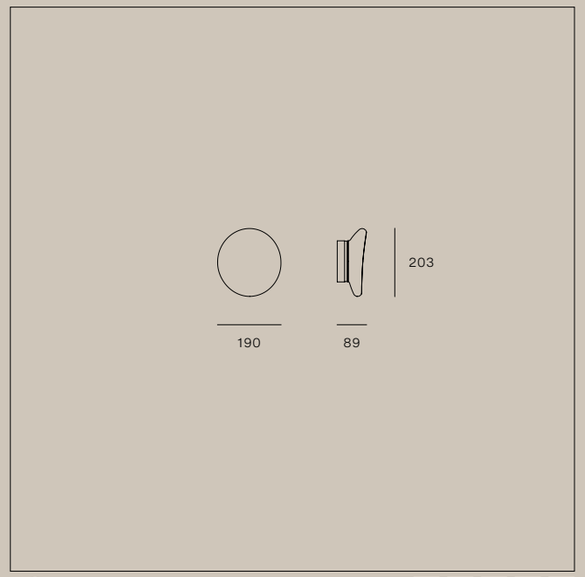

7785
7785M

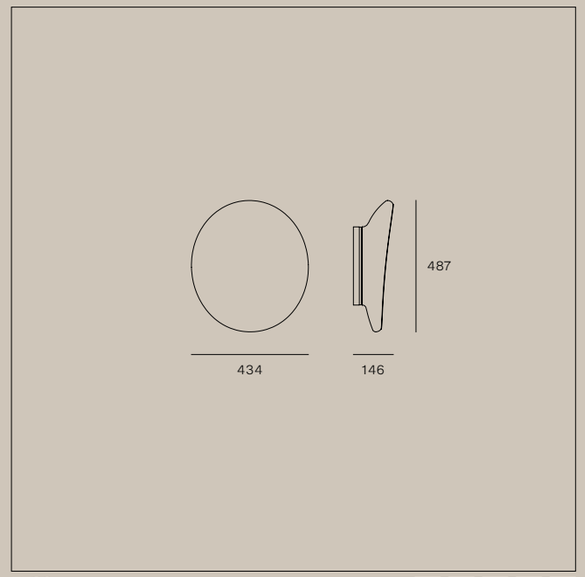

7786
7786M

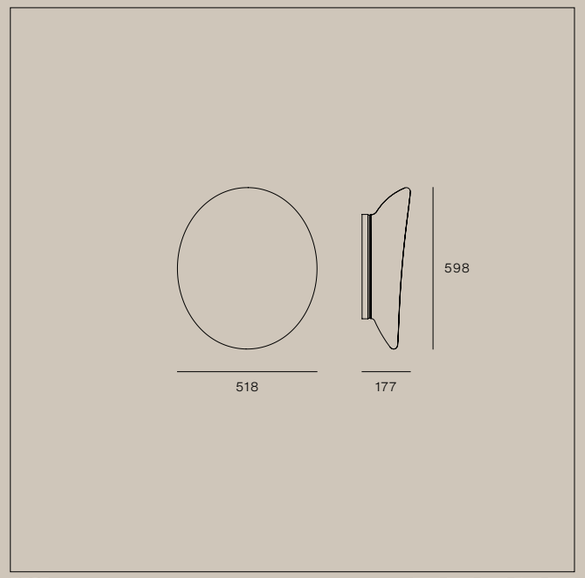

7787
7787M

Dynamic, Wall

Code	Finish	Source	Input	Dimming	CCT (K)	Lm D	CRI	IP	Optic
7785	White Glass	TopLED 6W	220-240V	No	3000	377	90	44	Diffused
7785M	White Glass	TopLED 6W	220-240V	No	2700	358	90	44	Diffused
7786	White Glass	TopLED 21W	220-240V	No	3000	1621	90	44	Diffused
7786M	White Glass	TopLED 21W	220-240V	No	2700	1539	90	44	Diffused
7787	White Glass	TopLED 30W	220-240V	No	3000	2277	90	44	Diffused
7787M	White Glass	TopLED 30W	220-240V	No	2700	2163	90	44	Diffused

Fante

Ceiling

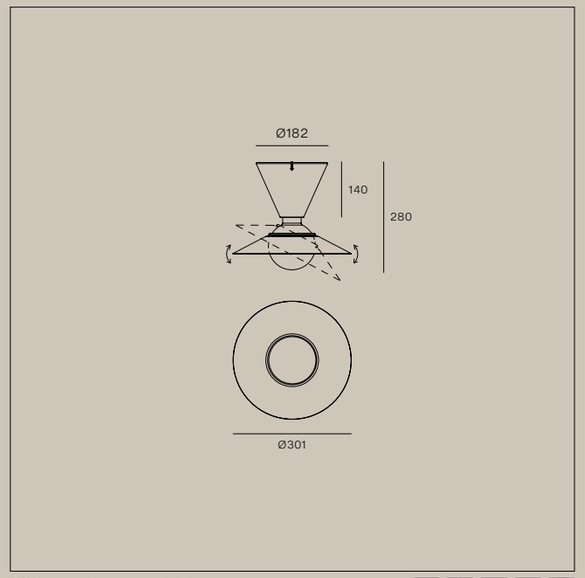

8967 **Included bulb**
8969 Globo 125 Full Light
LED Bulb E27 11W

IP20

Fante, Ceiling

Code	Finish	Source	Input	Dimming	CCT (K)	Lm D	CRI	IP	Optic
8967	Black Silicon - Text. White	1xE27 11W	220-240V	No	2700	1520	≥80	20	Diffused
8969	Brick Red Silicon - Text. White	1xE27 11W	220-240V	No	2700	1520	≥80	20	Diffused

Fante

Table

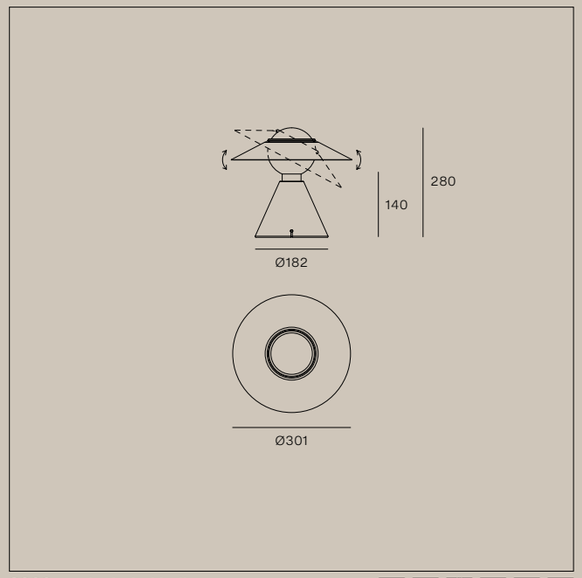

8966 **Included bulb**
8968 Globo 125 Full Light
LED Bulb E27 11W

IP20

Fante, Table

Code	Finish	Source	Input	Dimming	CCT (K)	Lm D	CRI	IP	Optic
8966	Black Silicon - Text. White	1xE27 11W	220-240V	No	2700	1520	≥80	20	Diffused
8968	Brick Red Silicon - Text. White	1xE27 11W	220-240V	No	2700	1520	≥80	20	Diffused

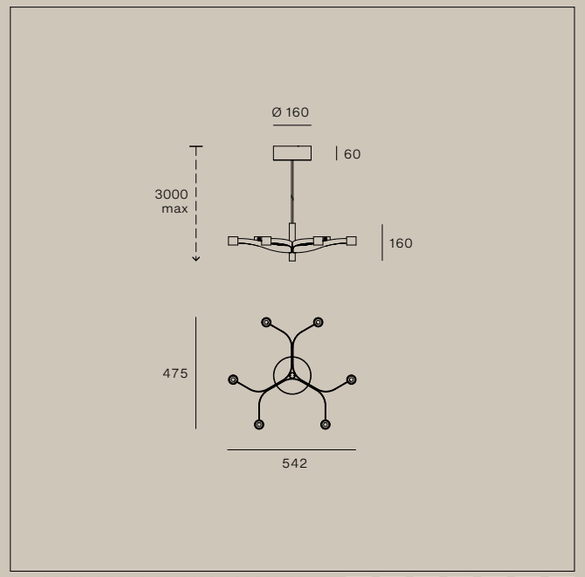

CZ160CWHMDW
CZ160CBBMDW
CZ160CMTMDW
KIT0079 / CASAMBI
DALI / 1 art / in

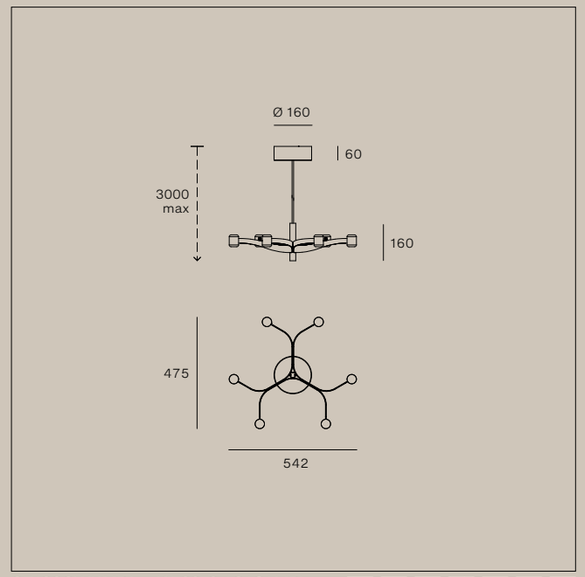

CZ160CWHMDI
CZ160CBBMDI
CZ160CMTMDI
KIT0079 / CASAMBI
DALI / 1 art / in

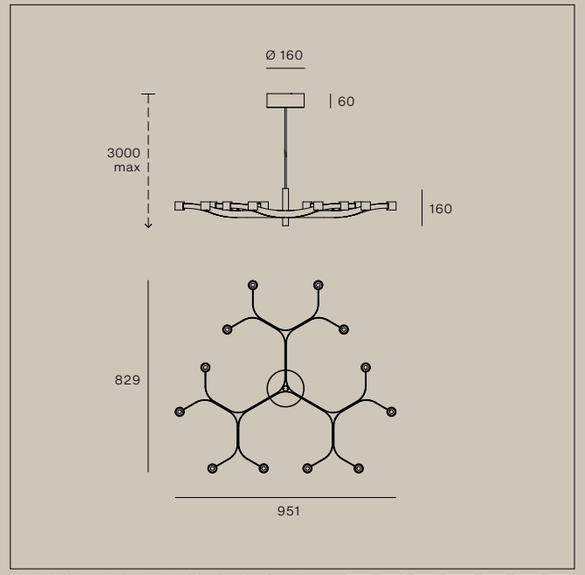

CZ159CWHMDW
CZ159CBBMDW
CZ159CMTMDW
KIT0079 / CASAMBI
DALI / 1 art / in

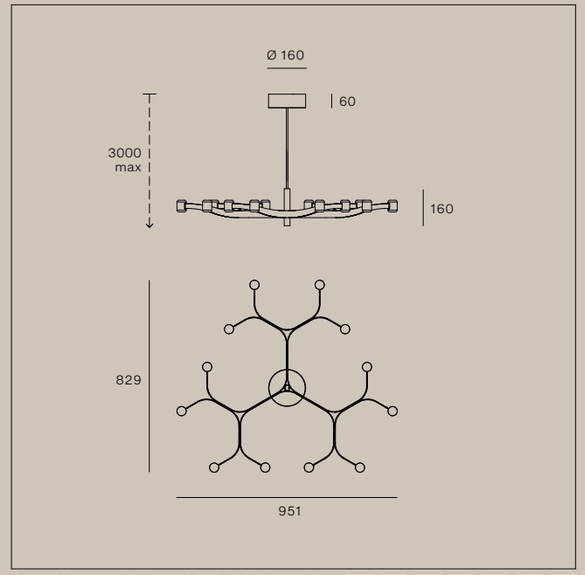

CZ159CWHMDI
CZ159CBBMDI
CZ159CMTMDI
KIT0079 / CASAMBI
DALI / 1 art / in

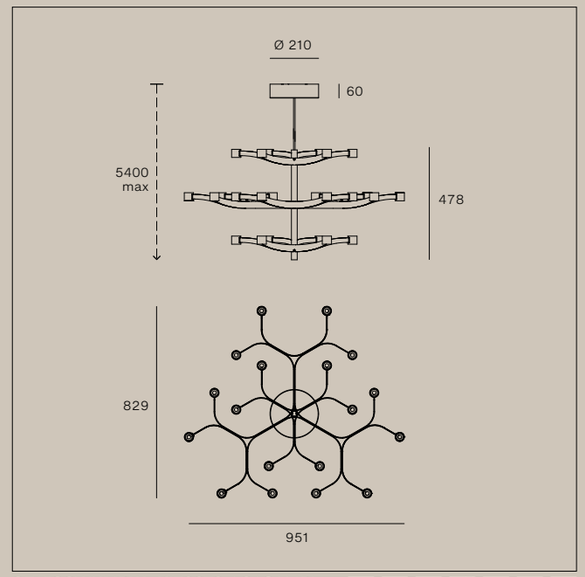

CZ158CWHMDW
CZ158CBBMDW
CZ158CMTMDW
KIT0079 / CASAMBI
DALI / 1 art / in

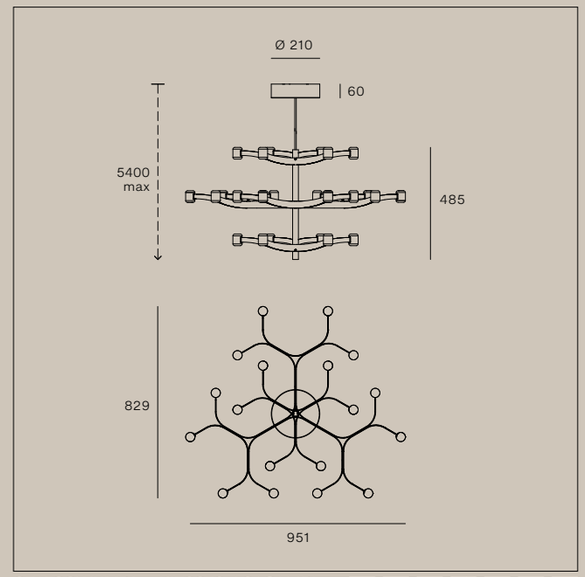

CZ158CWHMDI
CZ158CBBMDI
CZ158CMTMDI
KIT0079 / CASAMBI
DALI / 1 art / in

Fronda, Pendant - Comfort optic

Code	Finish	Source	Input	Dimming	CCT (K)	Lm D	CRI	IP	Optic
CZ160CWHMDW	Textured White	TopLED 27W	220-240V	DALI Push	2700	1726	90	20	Diff.+W.Flood
CZ160CBBMDW	Textured Black	TopLED 27W	220-240V	DALI Push	2700	1726	90	20	Diff.+W.Flood
CZ160CMTMDW	Text. Mushroom	TopLED 27W	220-240V	DALI Push	2700	1726	90	20	Diff.+W.Flood
CZ159CWHMDW	Textured White	TopLED 51W	220-240V	DALI Push	2700	3125	90	20	Diff.+W.Flood
CZ159CBBMDW	Textured Black	TopLED 51W	220-240V	DALI Push	2700	3125	90	20	Diff.+W.Flood
CZ159CMTMDW	Text. Mushroom	TopLED 51W	220-240V	DALI Push	2700	3125	90	20	Diff.+W.Flood
CZ158CWHMDW	Textured White	TopLED 106W	220-240V	DALI Push	2700	6720	90	20	Diff.+W.Flood
CZ158CBBMDW	Textured Black	TopLED 106W	220-240V	DALI Push	2700	6720	90	20	Diff.+W.Flood
CZ158CMTMDW	Text. Mushroom	TopLED 106W	220-240V	DALI Push	2700	6720	90	20	Diff.+W.Flood

Fronda, Pendant - Diffused optic

Code	Finish	Source	Input	Dimming	CCT (K)	Lm D	CRI	IP	Optic
CZ160CWHMDI	Textured White	TopLED 27W	220-240V	DALI Push	2700	1381	90	20	Diffused
CZ160CBBMDI	Textured Black	TopLED 27W	220-240V	DALI Push	2700	1381	90	20	Diffused
CZ160CMTMDI	Text. Mushroom	TopLED 27W	220-240V	DALI Push	2700	1381	90	20	Diffused
CZ159CWHMDI	Textured White	TopLED 51W	220-240V	DALI Push	2700	2640	90	20	Diffused
CZ159CBBMDI	Textured Black	TopLED 51W	220-240V	DALI Push	2700	2640	90	20	Diffused
CZ159CMTMDI	Text. Mushroom	TopLED 51W	220-240V	DALI Push	2700	2640	90	20	Diffused
CZ158CWHMDI	Textured White	TopLED 106W	220-240V	DALI Push	2700	5407	90	20	Diffused
CZ158CBBMDI	Textured Black	TopLED 106W	220-240V	DALI Push	2700	5407	90	20	Diffused
CZ158CMTMDI	Text. Mushroom	TopLED 106W	220-240V	DALI Push	2700	5407	90	20	Diffused

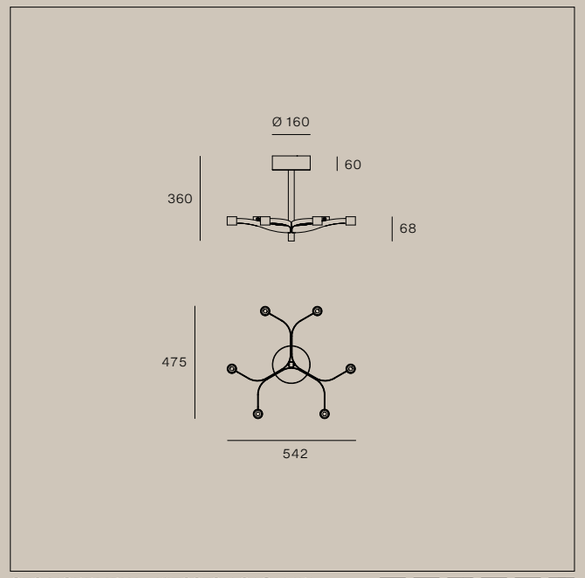

CZ041CBBMDW **KIT0079** / CASAMBI
CZ041CWHMDW DALI / 1 art / in
CZ041CMTMDW

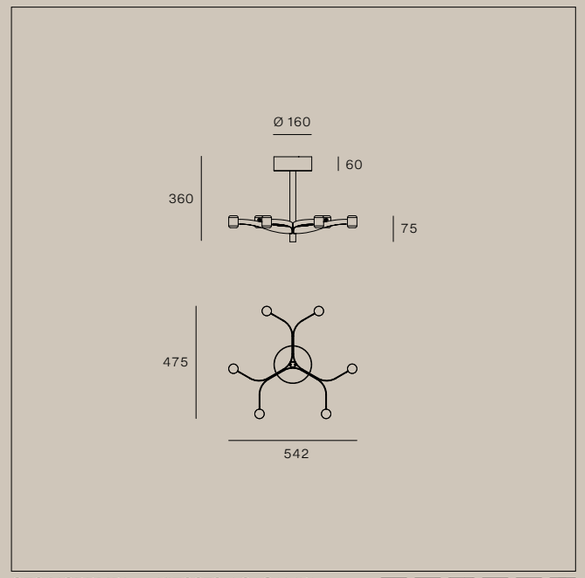

CZ041CBBMDI **KIT0079** / CASAMBI
CZ041CWHMDI DALI / 1 art / in
CZ041CMTMDI

Fronda, Ceiling - Comfort optic

Code	Finish	Source	Input	Dimming	CCT (K)	Lm D	CRI	IP	Optic
CZ041CWHMDW	Textured White	TopLED 27W	220-240V	DALI Push	2700	1726	90	20	Diff.+W.Flood
CZ041CBBMDW	Textured Black	TopLED 27W	220-240V	DALI Push	2700	1726	90	20	Diff.+W.Flood
CZ041CMTMDW	Text. Mushroom	TopLED 27W	220-240V	DALI Push	2700	1726	90	20	Diff.+W.Flood

Fronda, Ceiling - Diffused optic

Code	Finish	Source	Input	Dimming	CCT (K)	Lm D	CRI	IP	Optic
CZ041CWHMDI	Textured White	TopLED 27W	220-240V	DALI Push	2700	1381	90	20	Diffused
CZ041CBBMDI	Textured Black	TopLED 27W	220-240V	DALI Push	2700	1381	90	20	Diffused
CZ041CMTMDI	Text. Mushroom	TopLED 27W	220-240V	DALI Push	2700	1381	90	20	Diffused

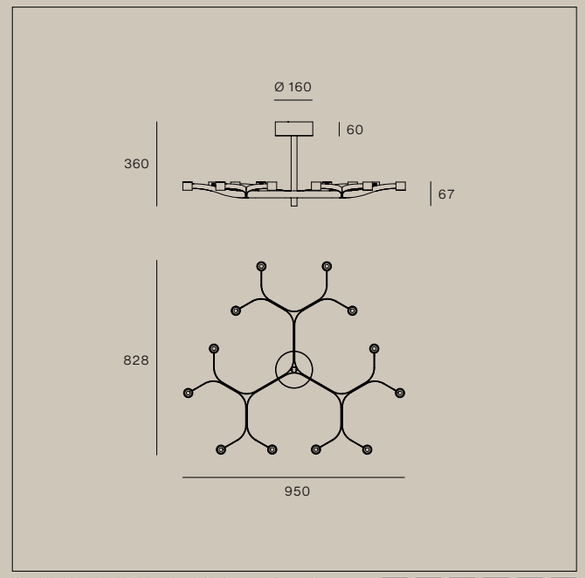

CZ042CWHMDW **KIT0079** / CASAMBI
CZ042CBBMDW DALI / 1 art / in
CZ042CMTMDW

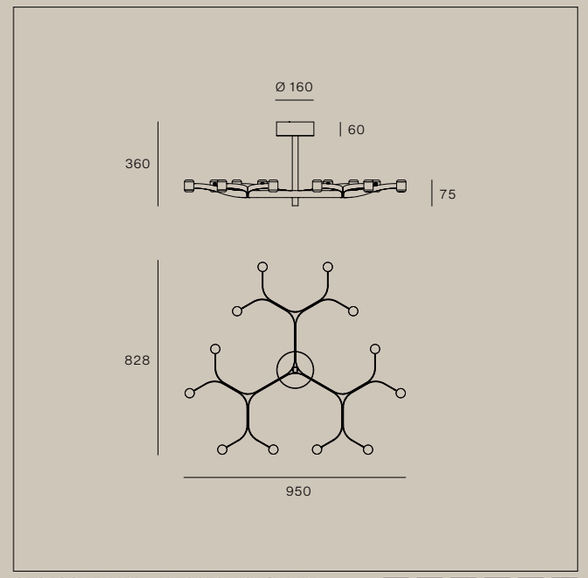

CZ042CWHMDI **KIT0079** / CASAMBI
CZ042CBBMDI DALI / 1 art / in
CZ042CMTMDI

Fronda, Ceiling - Comfort optic

Code	Finish	Source	Input	Dimming	CCT (K)	Lm D	CRI	IP	Optic
CZ042CWHMDW	Textured White	TopLED 51W	220-240V	DALI Push	2700	3125	90	20	Diff.+W.Flood
CZ042CBBMDW	Textured Black	TopLED 51W	220-240V	DALI Push	2700	3125	90	20	Diff.+W.Flood
CZ042CMTMDW	Text. Mushroom	TopLED 51W	220-240V	DALI Push	2700	3125	90	20	Diff.+W.Flood

Fronda, Ceiling - Diffused optic

Code	Finish	Source	Input	Dimming	CCT (K)	Lm D	CRI	IP	Optic
CZ042CWHMDI	Textured White	TopLED 51W	220-240V	DALI Push	2700	2640	90	20	Diffused
CZ042CBBMDI	Textured Black	TopLED 51W	220-240V	DALI Push	2700	2640	90	20	Diffused
CZ042CMTMDI	Text. Mushroom	TopLED 51W	220-240V	DALI Push	2700	2640	90	20	Diffused

Galassia Pendant

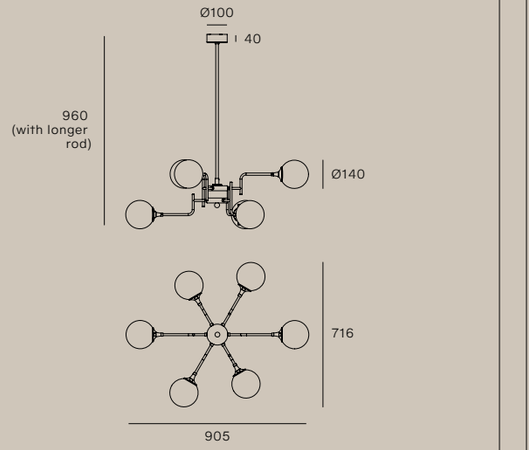

9556 **Included bulb**
Miniglobo P45
LED Bulb E14 6,5W

IP20

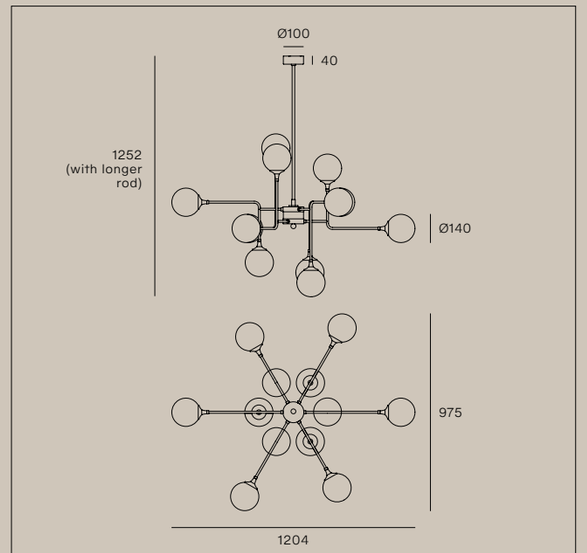

9555 **Included bulb**
Miniglobo P45
LED Bulb E14 6,5W

IP20

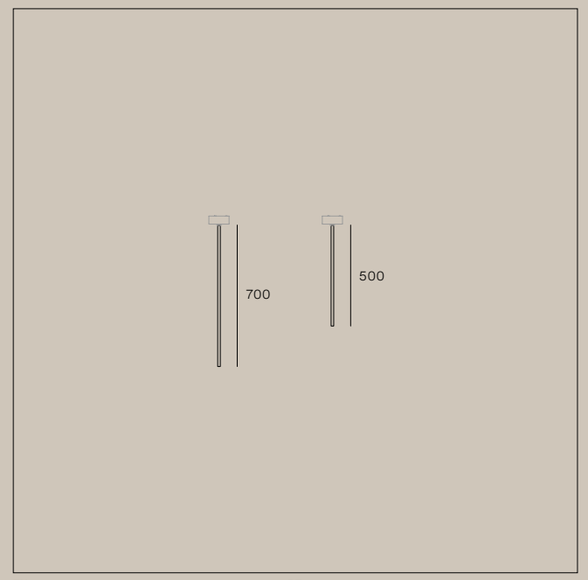

EN **2 rod sizes included**
IT **2 misure di asta incluse**
FR **2 tailles de tige incluses**

DE **2 Stabgrößen enthalten**
ES **2 tamaños de varilla incluidos**

Galassia, Pendant

Code	Finish	Source	Input	Dimming	CCT (K)	Lm D	CRI	IP	Optic
9556	Polished Gold - White Glass	6xE14 6,5W	220-240V	No	2700	3941	≥80	20	Diffused
9555	Polished Gold - White Glass	12xE14 6,5W	220-240V	No	2700	7887	≥80	20	Diffused

Galassia Wall

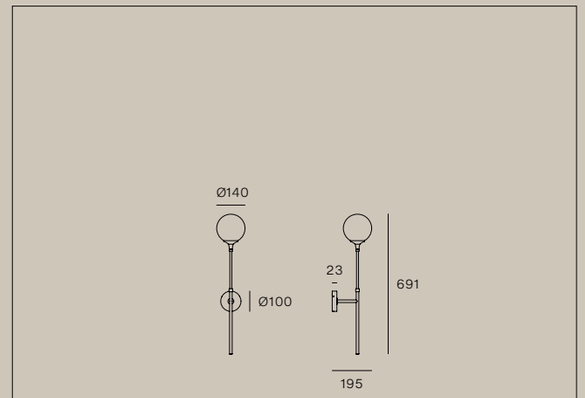

9559 **Included bulb**
Miniglobo P45
LED Bulb E14 6,5W

IP20

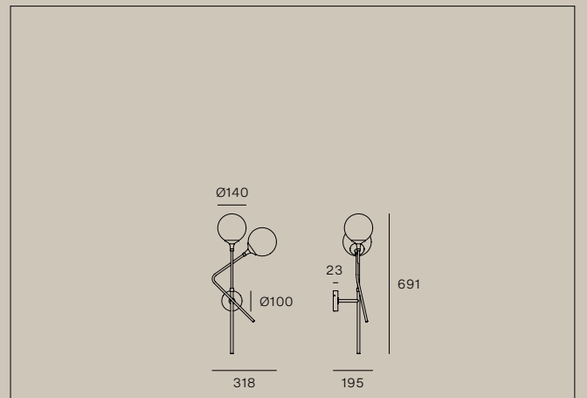

9557 **Included bulb**
Miniglobo P45
LED Bulb E14 6,5W

IP20

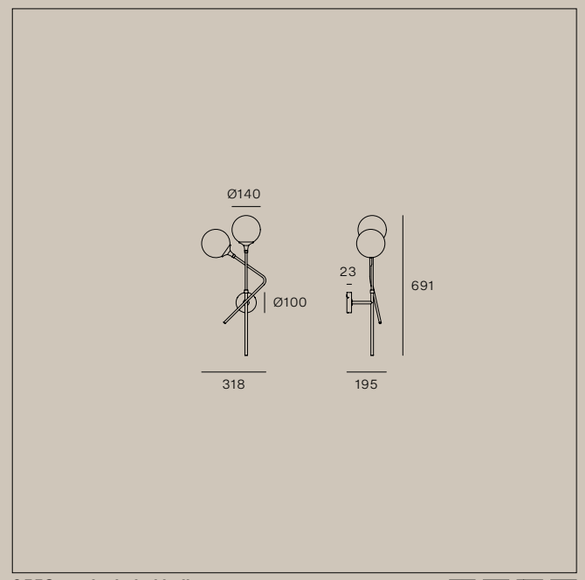

9558 **Included bulb**
Miniglobo P45
LED Bulb E14 6,5W

IP20

Galassia, Wall

Code	Finish	Source	Input	Dimming	CCT (K)	Lm D	CRI	IP	Optic
9559	Polished Gold - White Glass	1xE14 6,5W	220-240V	No	2700	657	≥80	20	Diffused
9557	Polished Gold - White Glass	2xE14 6,5W	220-240V	No	2700	1314	≥80	20	Diffused
9558	Polished Gold - White Glass	2xE14 6,5W	220-240V	No	2700	1314	≥80	20	Diffused

Galassia **Floor**

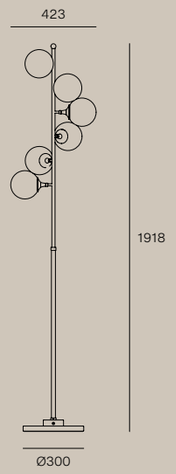

9560 **Included bulb**
Miniglobo P45
LED Bulb E14 6,5W

Galassia, Floor

Code	Finish	Source	Input	Dimming	CCT (K)	Lm D	CRI	IP	Optic
9560	Polished Gold - White Glass - Marble base	6xE14 6,5W	220-240V	No	2700	3941	≥80	20	Diffused

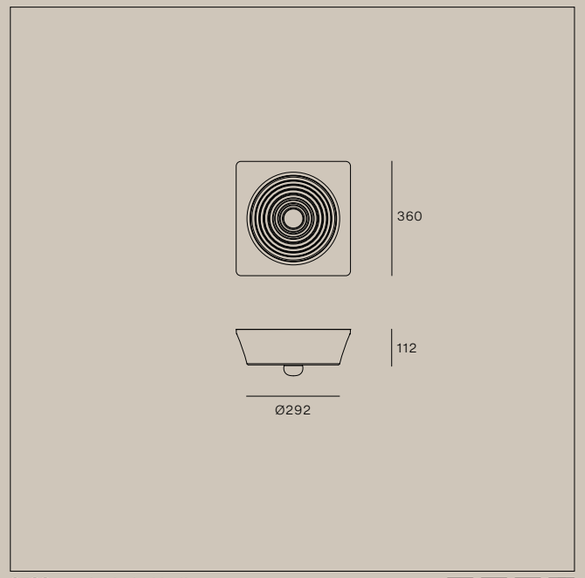

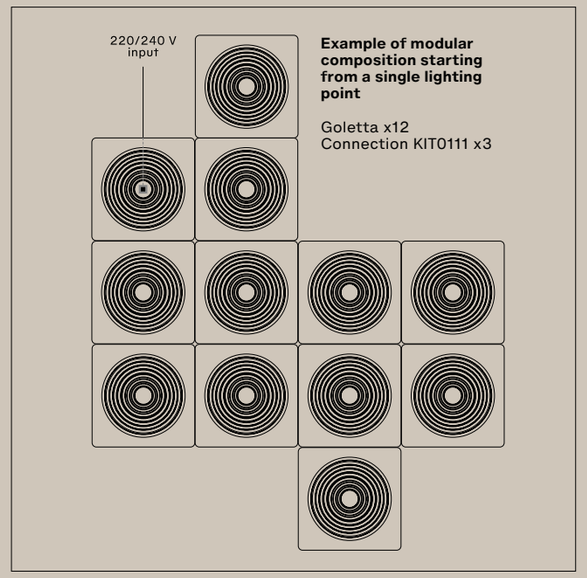

Example of modular composition starting from a single lighting point

Goletta x12
Connection KIT0111 x3

9733 **Included bulb**
9734 Classic A Mirror
9735 LED Bulb E27 6,5W
9736
9737 **Connection kit**
9738 **KIT0111** / 1-4 art.

IP20

EN KIT0111 contains three 5-way connectors, to connect up to four lamps together.

IT Il KIT0111 contiene tre connettori a 5 vie, per collegare assieme fino a quattro lampade.

FR Le KIT0111 contient trois connecteurs à 5 voies, pour brancher jusqu'à 4 lampes ensemble.

DE Das KIT0111 enthält drei 5-Wege-Anschlüsse, um bis zu vier Lampen miteinander verbinden zu können.

ES El KIT0111 contiene tres conectores de 5 vías para conectar hasta cuatro lámparas entre sí.

Goletta, Wall/Ceiling

Code	Finish	Source	Input	Dimming	CCT (K)	Lm D	CRI	IP	Optic
9733	Polished Pure White	1xE27 6,5W	220-240V	No	2700	650	≥80	20	Diffused
9734	Polished Black - Polished Pure White	1xE27 6,5W	220-240V	No	2700	650	≥80	20	Diffused
9735	Polish. Red Iconic - Polish. Pure White	1xE27 6,5W	220-240V	No	2700	650	≥80	20	Diffused
9736	Polish. Pure White - Polish. Aluminium	1xE27 6,5W	220-240V	No	2700	650	≥80	20	Diffused
9737	Polished Black - Polished Aluminium	1xE27 6,5W	220-240V	No	2700	650	≥80	20	Diffused
9738	Polish. Red Iconic - Polish. Aluminium	1xE27 6,5W	220-240V	No	2700	650	≥80	20	Diffused

Colonna

Pendant

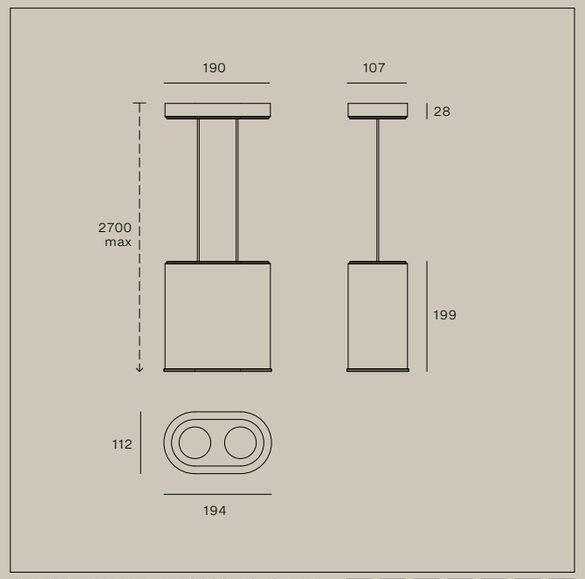

CZ153DWWWWF **KIT0080** / CASAMBI
CZ153DWWMWF PH-CUT / 1 art / out
CZ153DBBWWF **KIT0026**
CZ153DBBMWF PH-CUT / 1-4 art
CZ153DCTWWF
CZ153DCTMWF

Colonna, Pendant

Code	Finish	Source	Input	Dimming	CCT (K)	Lm D	CRI	IP	Optic
CZ153DWWWWF	Textured Off-White	ArrayLED 20W	220-240V	Phase-cut	3000	1917	90	20	Wide Flood
CZ153DWWMWF	Textured Off-White	ArrayLED 20W	220-240V	Phase-cut	2700	1821	90	20	Wide Flood
CZ153DBBWWF	Textured Black	ArrayLED 20W	220-240V	Phase-cut	3000	1917	90	20	Wide Flood
CZ153DBBMWF	Textured Black	ArrayLED 20W	220-240V	Phase-cut	2700	1821	90	20	Wide Flood
CZ153DCTWWF	Textured Toffee	ArrayLED 20W	220-240V	Phase-cut	3000	1917	90	20	Wide Flood
CZ153DCTMWF	Textured Toffee	ArrayLED 20W	220-240V	Phase-cut	2700	1821	90	20	Wide Flood

Colonna

Ceiling

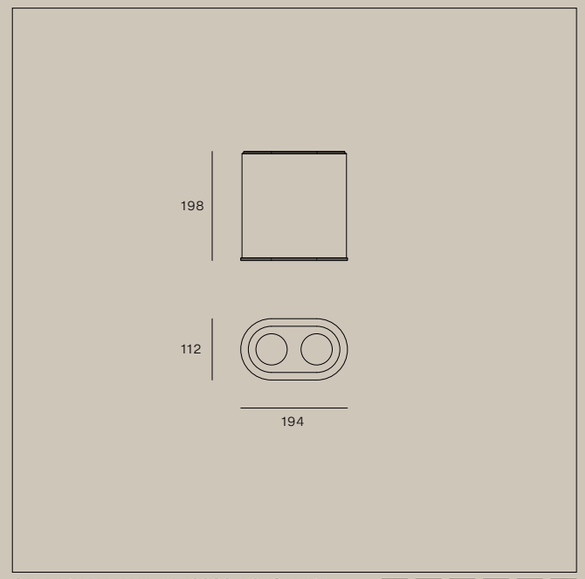

CZ155DWWWWF **KIT0080** / CASAMBI
CZ155DWWMWF PH-CUT / 1 art / in
CZ155DBBWWF **KIT0026**
CZ155DBBMWF PH-CUT / 1-4 art
CZ155DCTWWF
CZ155DCTMWF

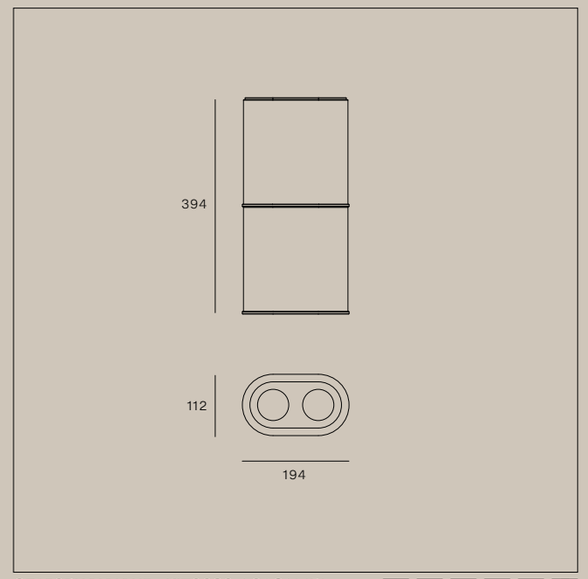

CZ156DWWWWF **KIT0080** / CASAMBI
CZ156DWWMWF PH-CUT / 1 art / in
CZ156DBBWWF **KIT0026**
CZ156DBBMWF PH-CUT / 1-4 art
CZ156DCTWWF
CZ156DCTMWF

Colonna, Ceiling

Code	Finish	Source	Input	Dimming	CCT (K)	Lm D	CRI	IP	Optic
CZ155DWWWWF	Textured Off-White	ArrayLED 20W	220-240V	Phase-cut	3000	1917	90	20	Wide Flood
CZ155DWWMWF	Textured Off-White	ArrayLED 20W	220-240V	Phase-cut	2700	1821	90	20	Wide Flood
CZ155DBBWWF	Textured Black	ArrayLED 20W	220-240V	Phase-cut	3000	1917	90	20	Wide Flood
CZ155DBBMWF	Textured Black	ArrayLED 20W	220-240V	Phase-cut	2700	1821	90	20	Wide Flood
CZ155DCTWWF	Textured Toffee	ArrayLED 20W	220-240V	Phase-cut	3000	1917	90	20	Wide Flood
CZ155DCTMWF	Textured Toffee	ArrayLED 20W	220-240V	Phase-cut	2700	1821	90	20	Wide Flood
CZ156DWWWWF	Textured Off-White	ArrayLED 20W	220-240V	Phase-cut	3000	1917	90	20	Wide Flood
CZ156DWWMWF	Textured Off-White	ArrayLED 20W	220-240V	Phase-cut	2700	1821	90	20	Wide Flood
CZ156DBBWWF	Textured Black	ArrayLED 20W	220-240V	Phase-cut	3000	1917	90	20	Wide Flood
CZ156DBBMWF	Textured Black	ArrayLED 20W	220-240V	Phase-cut	2700	1821	90	20	Wide Flood
CZ156DCTWWF	Textured Toffee	ArrayLED 20W	220-240V	Phase-cut	3000	1917	90	20	Wide Flood
CZ156DCTMWF	Textured Toffee	ArrayLED 20W	220-240V	Phase-cut	2700	1821	90	20	Wide Flood

Gomito Wall

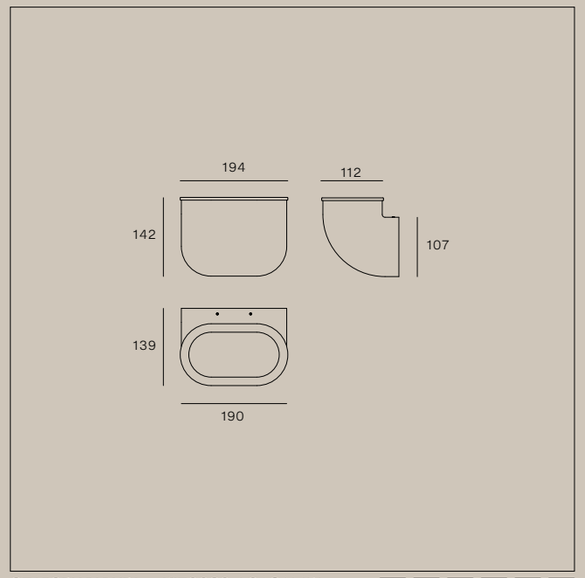

CZ152DWWWDI
CZ152DWWMDI
CZ152DBBWDI
CZ152DBBMDI
CZ152DCTWDI
CZ152DCTMDI

KIT0080 / CASAMBI
PH-CUT / 1 art / in
KIT0026
PH-CUT / 1-3 art

IP20

Gomito, Wall

Code	Finish	Source	Input	Dimming	CCT (K)	Lm D	CRI	IP	Optic
CZ152DWWWDI	Textured Off-White	TopLED 26W	220-240V	Phase-cut	3000	2133	90	20	Diffused
CZ152DWWMDI	Textured Off-White	TopLED 26W	220-240V	Phase-cut	2700	2029	90	20	Diffused
CZ152DBBWDI	Textured Black	TopLED 26W	220-240V	Phase-cut	3000	2133	90	20	Diffused
CZ152DBBMDI	Textured Black	TopLED 26W	220-240V	Phase-cut	2700	2029	90	20	Diffused
CZ152DCTWDI	Textured Toffee	TopLED 26W	220-240V	Phase-cut	3000	2133	90	20	Diffused
CZ152DCTMDI	Textured Toffee	TopLED 26W	220-240V	Phase-cut	2700	2029	90	20	Diffused

Colonna Floor

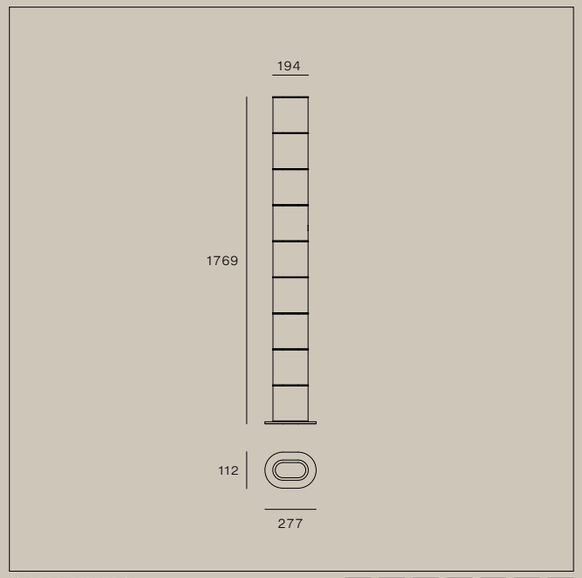

CZ157FWWWDI
CZ157FWWMDI
CZ157FBBWDI
CZ157FBBMDI
CZ157FCTWDI
CZ157FCTMDI

IP20

Colonna, Floor

Code	Finish	Source	Input	Dimming	CCT (K)	Lm D	CRI	IP	Optic
CZ157FWWWDI	Textured Off-White	TopLED 49W	220-240V	Push DIM	3000	4182	90	20	Wide Flood
CZ157FWWMDI	Textured Off-White	TopLED 49W	220-240V	Push DIM	2700	3971	90	20	Wide Flood
CZ157FBBWDI	Textured Black	TopLED 49W	220-240V	Push DIM	3000	4182	90	20	Wide Flood
CZ157FBBMDI	Textured Black	TopLED 49W	220-240V	Push DIM	2700	3971	90	20	Wide Flood
CZ157FCTWDI	Textured Toffee	TopLED 49W	220-240V	Push DIM	3000	4182	90	20	Wide Flood
CZ157FCTMDI	Textured Toffee	TopLED 49W	220-240V	Push DIM	2700	3971	90	20	Wide Flood

Gravita **Table**

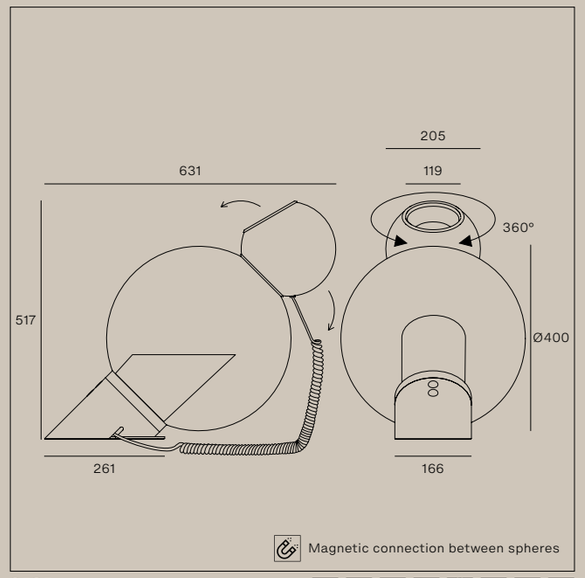

9585

Gravita, Table

Code	Finish	Source	Input	Dimming	CCT (K)	Lm D	CRI	IP	Optic
9585	Anodized Black Aluminium - Chrome - Transparent Glass	TopLED 8W + ArrayLED 16W	220-240V	Push DIM	3000	1711	90	20	Diffused + E. W. Flood

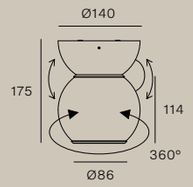

Magnetic connection between spheres

9717 **KIT0080** / CASAMBI
9717M PH-CUT / 1 art / in
9718 **KIT0026**
9718M PH-CUT / 1-8 art
9719
9719M

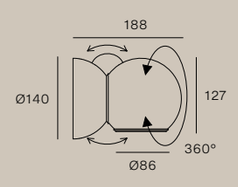

Magnetic connection between spheres

9720 **KIT0080** / CASAMBI
9720M PH-CUT / 1 art / in
9721 **KIT0026**
9721M PH-CUT / 1-8 art
9722
9722M

Gravitino 541, Wall/Ceiling

Code	Finish	Source	Input	Dimming	CCT (K)	Lm D	CRI	IP	Optic
9717	Polished Pure White	ArrayLED 11W	220-240V	Phase-cut	3000	956	90	20	Extra Wide Flood
9717M	Polished Pure White	ArrayLED 11W	220-240V	Phase-cut	2700	908	90	20	Extra Wide Flood
9718	Polished Black	ArrayLED 11W	220-240V	Phase-cut	3000	956	90	20	Extra Wide Flood
9718M	Polished Black	ArrayLED 11W	220-240V	Phase-cut	2700	908	90	20	Extra Wide Flood
9719	Polished Grey	ArrayLED 11W	220-240V	Phase-cut	3000	956	90	20	Extra Wide Flood
9719M	Polished Grey	ArrayLED 11W	220-240V	Phase-cut	2700	908	90	20	Extra Wide Flood
9720	Polished Pure White	ArrayLED 11W	220-240V	Phase-cut	3000	956	90	20	Extra Wide Flood
9720M	Polished Pure White	ArrayLED 11W	220-240V	Phase-cut	2700	908	90	20	Extra Wide Flood
9721	Polished Black	ArrayLED 11W	220-240V	Phase-cut	3000	956	90	20	Extra Wide Flood
9721M	Polished Black	ArrayLED 11W	220-240V	Phase-cut	2700	908	90	20	Extra Wide Flood
9722	Polished Grey	ArrayLED 11W	220-240V	Phase-cut	3000	956	90	20	Extra Wide Flood
9722M	Polished Grey	ArrayLED 11W	220-240V	Phase-cut	2700	908	90	20	Extra Wide Flood

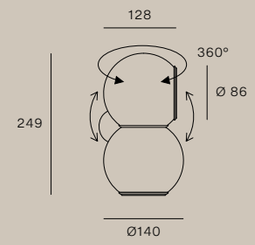

Magnetic connection between spheres

9711
9711M
9712
9712M
9713
9713M
9714
9714M
9715
9715M
9716
9716M

Gravitino 541, Table

Code	Finish	Source	Input	Dimming	CCT (K)	Lm D	CRI	IP	Optic
9711	Polished Pure White	ArrayLED 11W	220-240V	Push DIM	3000	956	90	20	Extra Wide Flood
9711M	Polished Pure White	ArrayLED 11W	220-240V	Push DIM	2700	908	90	20	Extra Wide Flood
9712	Polished Black	ArrayLED 11W	220-240V	Push DIM	3000	956	90	20	Extra Wide Flood
9712M	Polished Black	ArrayLED 11W	220-240V	Push DIM	2700	908	90	20	Extra Wide Flood
9713	Polish. Red Iconic - Polish. Grey	ArrayLED 11W	220-240V	Push DIM	3000	956	90	20	Extra Wide Flood
9713M	Polish. Red Iconic - Polish. Grey	ArrayLED 11W	220-240V	Push DIM	2700	908	90	20	Extra Wide Flood
9714	Polished Red Iconic	ArrayLED 11W	220-240V	Push DIM	3000	956	90	20	Extra Wide Flood
9714M	Polished Red Iconic	ArrayLED 11W	220-240V	Push DIM	2700	908	90	20	Extra Wide Flood
9715	Polished Grey	ArrayLED 11W	220-240V	Push DIM	3000	956	90	20	Extra Wide Flood
9715M	Polished Grey	ArrayLED 11W	220-240V	Push DIM	2700	908	90	20	Extra Wide Flood
9716	Polish. Signal Yellow - Polish. Grey	ArrayLED 11W	220-240V	Push DIM	3000	956	90	20	Extra Wide Flood
9716M	Polish. Signal Yellow - Polish. Grey	ArrayLED 11W	220-240V	Push DIM	2700	908	90	20	Extra Wide Flood

Halley **Table**

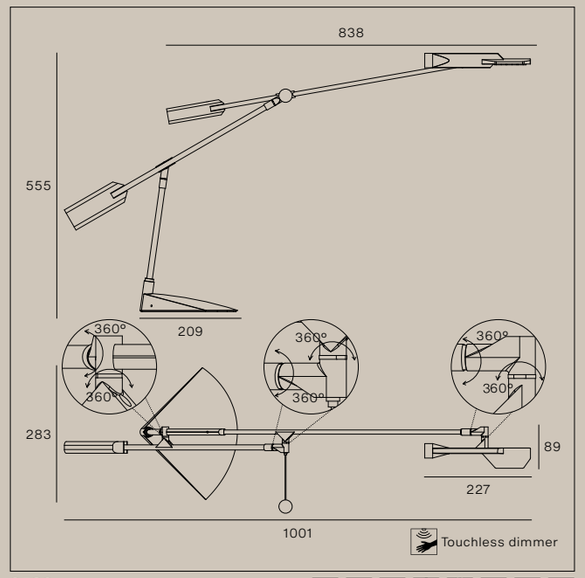

9586
9587
9586M
9587M

IP20

Halley, Table

Code	Finish	Source	Input	Dimming	CCT (K)	Lm D	CRI	IP	Optic
9586	Anodized Black Aluminium	TopLED 9W	220-240V	Touchless	3000	566	90	20	Diffused
9586M	Anodized Black Aluminium	TopLED 9W	220-240V	Touchless	2700	529	90	20	Diffused
9587	Anodized Aluminum	TopLED 9W	220-240V	Touchless	3000	566	90	20	Diffused
9587M	Anodized Aluminum	TopLED 9W	220-240V	Touchless	2700	529	90	20	Diffused

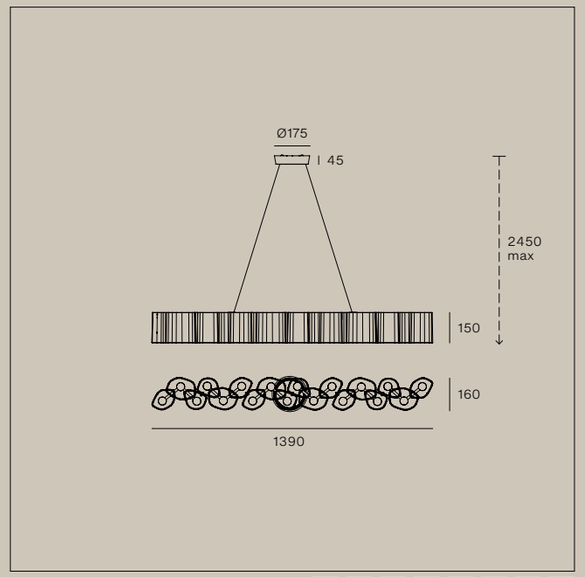

8685 **KIT0079** / CASAMBI
DALI / 1 art / in

8680 **KIT0080** / CASAMBI
PH-CUT / 1 art / in
KIT0026
PH-CUT / 1-2 art

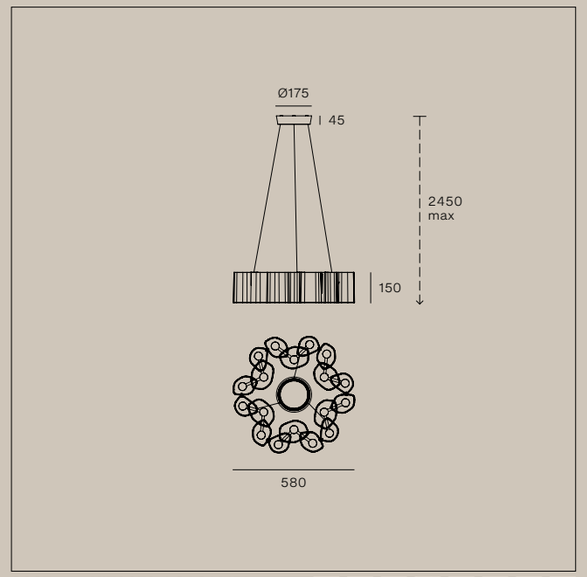

8687 **KIT0079** / CASAMBI
DALI / 1 art / in

8682 **KIT0080** / CASAMBI
PH-CUT / 1 art / in
KIT0026
PH-CUT / 1-2 art

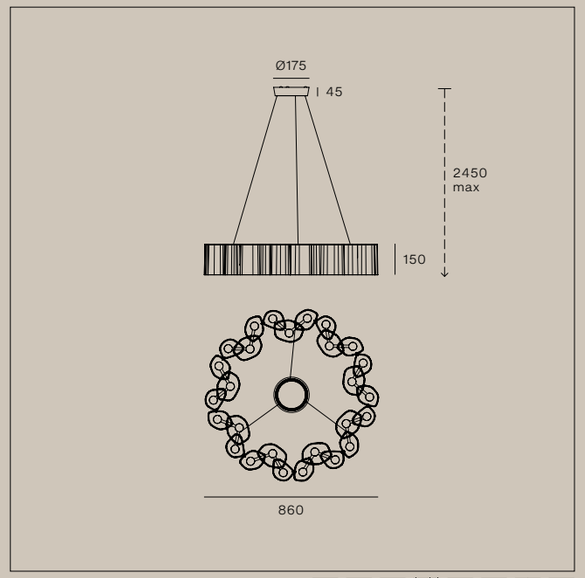

8689 **KIT0079** / CASAMBI
DALI / 1 art / in

8684 **KIT0080** / CASAMBI
PH-CUT / 1 art / in
KIT0026
PH-CUT / 1-2 art

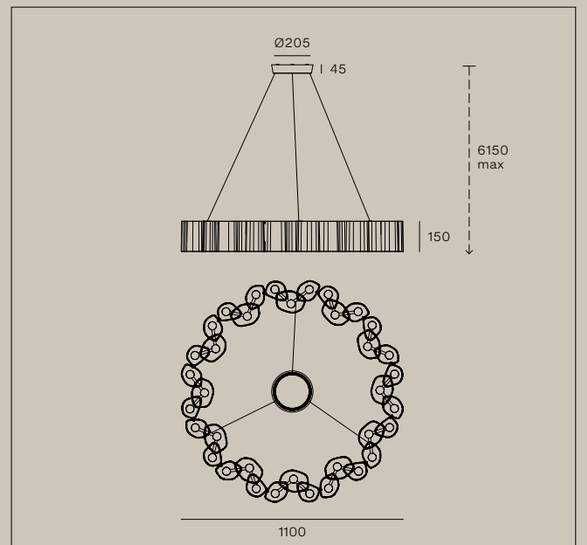

8686 **KIT0079** / CASAMBI
DALI / 1 art / in

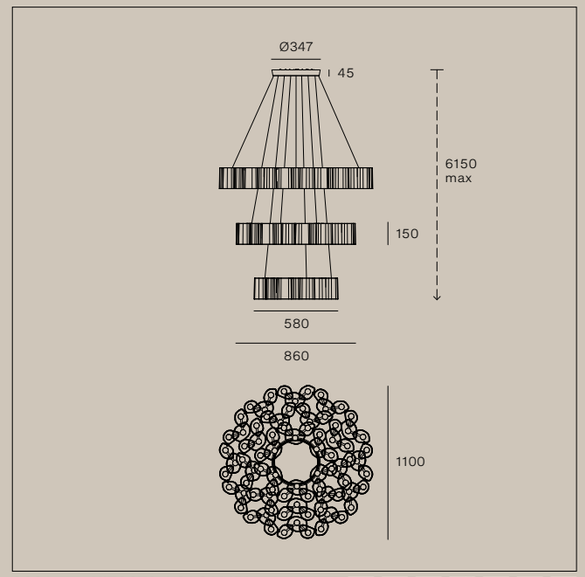

8691 **KIT0079** / CASAMBI
DALI / 3 x 1 art / in

Honey, Pendant

Code	Finish	Source	Input	Dimming	CCT (K)	Lm D	CRI	IP	Optic
8685	White Polycarbonate	TopLED 35W	220-240V	DALI Push	2700	2315	90	20	Diffused
8680	White Polycarbonate	TopLED 35W	220-240V	Phase-cut	2700	2315	90	20	Diffused
8687	White Polycarbonate	TopLED 35W	220-240V	DALI Push	2700	2433	90	20	Diffused
8682	White Polycarbonate	TopLED 35W	220-240V	Phase-cut	2700	2433	90	20	Diffused
8689	White Polycarbonate	TopLED 49W	220-240V	DALI Push	2700	3687	90	20	Diffused
8684	White Polycarbonate	TopLED 49W	220-240V	Phase-cut	2700	3687	90	20	Diffused
8686	White Polycarbonate	TopLED 105W	220-240V	DALI Push	2700	7415	90	20	Diffused
8691	White Polycarbonate	TopLED 189W	220-240V	DALI Push	2700	13535	90	20	Diffused

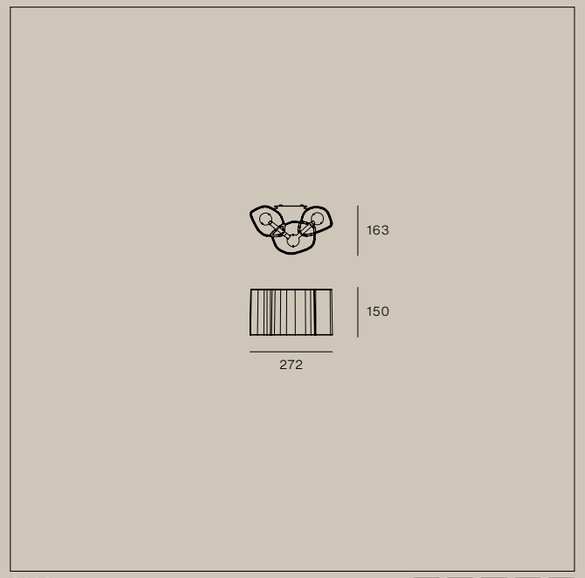

8688

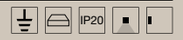

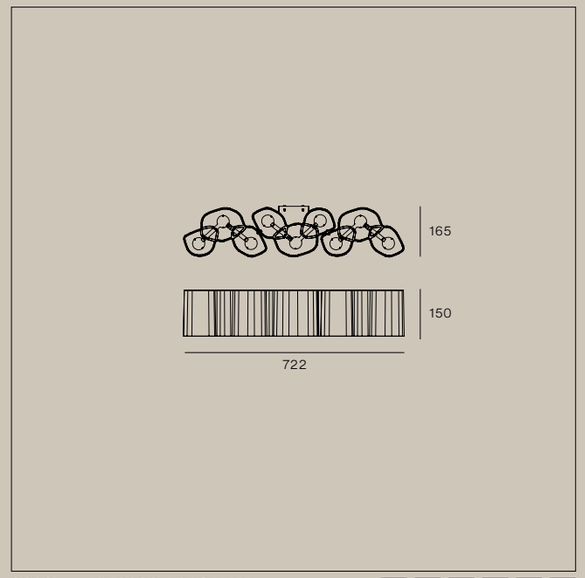

8690

KIT0080 / CASAMBI
PH-CUT / 1 art / in
KIT0026
PH-CUT / 1-4 art



Honey, Wall

Code	Finish	Source	Input	Dimming	CCT (K)	Lm D	CRI	IP	Optic
8688	White Polycarbonate	TopLED 6W	220-240V	No	2700	469	90	20	Diffused
8690	White Polycarbonate	TopLED 20W	220-240V	Phase-cut	2700	1356	90	20	Diffused

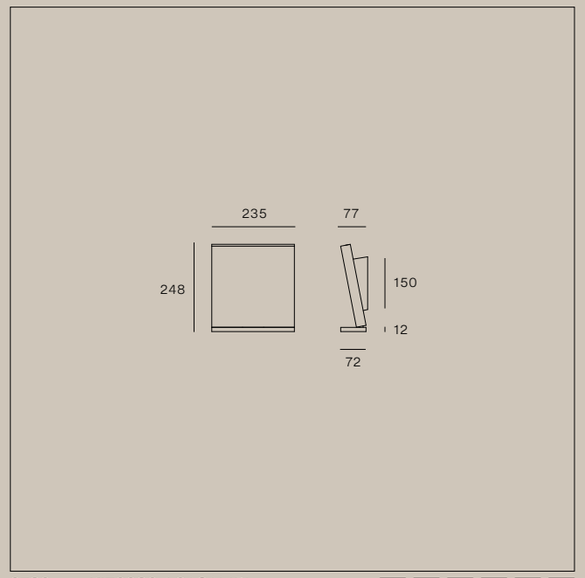

9780 **KIT0080** / CASAMBI
9780M PH-CUT / 1 art / in
9781 **KIT0026**
9781M PH-CUT / 1-3 art
9782
9782M
9783
9783M

IP20

Inbilico, Wall

Code	Finish	Source	Input	Dimming	CCT (K)	Lm D	CRI	IP	Optic
9780	Textured White	TopLED 28W	220-240V	Phase-cut	3000	2806	90	20	Diffused
9780M	Textured White	TopLED 28W	220-240V	Phase-cut	2700	2622	90	20	Diffused
9781	Brushed Gold - Text. White	TopLED 28W	220-240V	Phase-cut	3000	2806	90	20	Diffused
9781M	Brushed Gold - Text. White	TopLED 28W	220-240V	Phase-cut	2700	2622	90	20	Diffused
9782	Anodised Smoke Grey - Text. White	TopLED 28W	220-240V	Phase-cut	3000	2806	90	20	Diffused
9782M	Anodised Smoke Grey - Text. White	TopLED 28W	220-240V	Phase-cut	2700	2622	90	20	Diffused
9783	Text. Black - Text. White	TopLED 28W	220-240V	Phase-cut	3000	2806	90	20	Diffused
9783M	Text. Black - Text. White	TopLED 28W	220-240V	Phase-cut	2700	2622	90	20	Diffused

Kimia Pendant

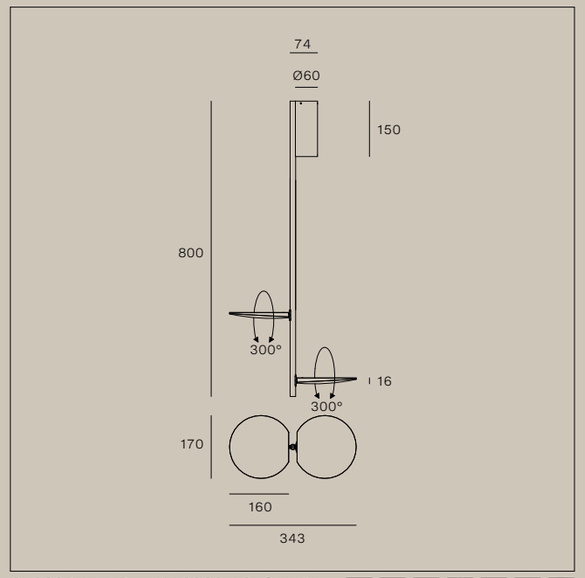

CZ039DWHMDI **KIT0080** / CASAMBI
CZ039DBBMDI PH-CUT / 1 art / out
CZ039DBVMDI **KIT0026**
PH-CUT / 1-3 art

Kimia, Pendant

Code	Finish	Source	Input	Dimming	CCT (K)	Lm D	CRI	IP	Optic
CZ039DWHMDI	Textured White	TopLED 33W	220-240V	Phase-cut	2700	3496	90	20	Diffused
CZ039DBBMDI	Textured Black	TopLED 33W	220-240V	Phase-cut	2700	3496	90	20	Diffused
CZ039DBVMDI	Satin Gold - Text. Black	TopLED 33W	220-240V	Phase-cut	2700	3496	90	20	Diffused

Kimia Ceiling

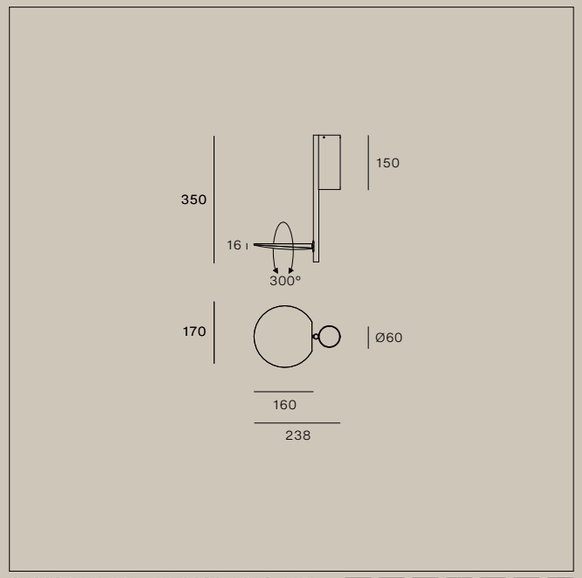

CZ038DWHMDI **KIT0080** / CASAMBI
CZ038DBBMDI PH-CUT / 1 art / out
CZ038DBVMDI **KIT0026**
PH-CUT / 1-4 art

Kimia, Ceiling

Code	Finish	Source	Input	Dimming	CCT (K)	Lm D	CRI	IP	Optic
CZ038DWHMDI	Textured White	TopLED 20W	220-240V	Phase-cut	2700	2120	90	20	Diffused
CZ038DBBMDI	Textured Black	TopLED 20W	220-240V	Phase-cut	2700	2120	90	20	Diffused
CZ038DBVMDI	Satin Gold - Text. Black	TopLED 20W	220-240V	Phase-cut	2700	2120	90	20	Diffused

Kimia Wall

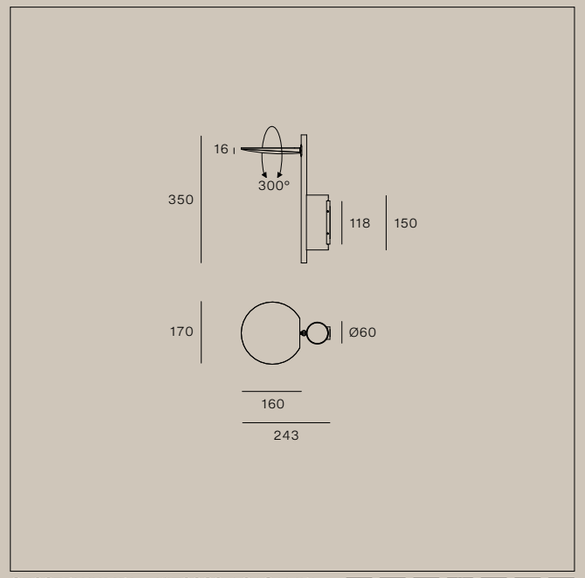

CZ037DWHMDI **KIT0080** / CASAMBI
CZ037DBBMDI PH-CUT / 1 art / out
CZ037DBVMDI **KIT0026**
PH-CUT / 1-4 art

IP20

Kimia, Wall

Code	Finish	Source	Input	Dimming	CCT (K)	Lm D	CRI	IP	Optic
CZ037DWHMDI	Textured White	TopLED 20W	220-240V	Phase-cut	2700	2120	90	20	Diffused
CZ037DBBMDI	Textured Black	TopLED 20W	220-240V	Phase-cut	2700	2120	90	20	Diffused
CZ037DBVMDI	Satin Gold - Text. Black	TopLED 20W	220-240V	Phase-cut	2700	2120	90	20	Diffused

Kimia Floor

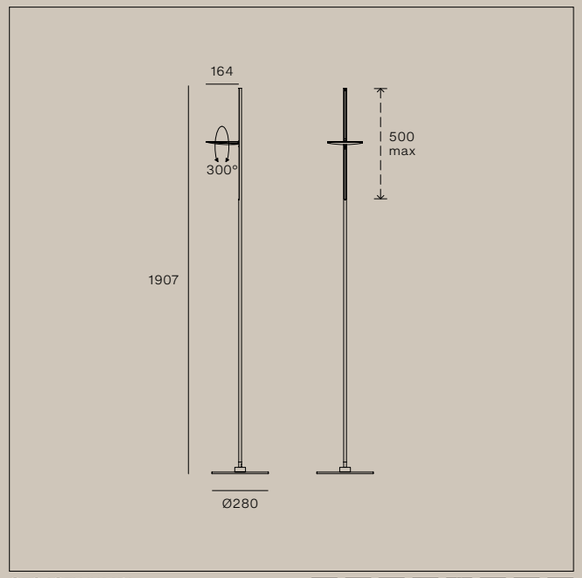

CZ043FWHMDI
CZ043FBBMDI
CZ043FBVMDI

Push DIM
IP20

Kimia, Floor

Code	Finish	Source	Input	Dimming	CCT (K)	Lm D	CRI	IP	Optic
CZ043FWHMDI	Textured White	TopLED 27W	220-240V	Push DIM	2700	2863	90	20	Diffused
CZ043FBBMDI	Textured Black	TopLED 27W	220-240V	Push DIM	2700	2863	90	20	Diffused
CZ043FBVMDI	Satin Gold - Text. Black	TopLED 27W	220-240V	Push DIM	2700	2863	90	20	Diffused

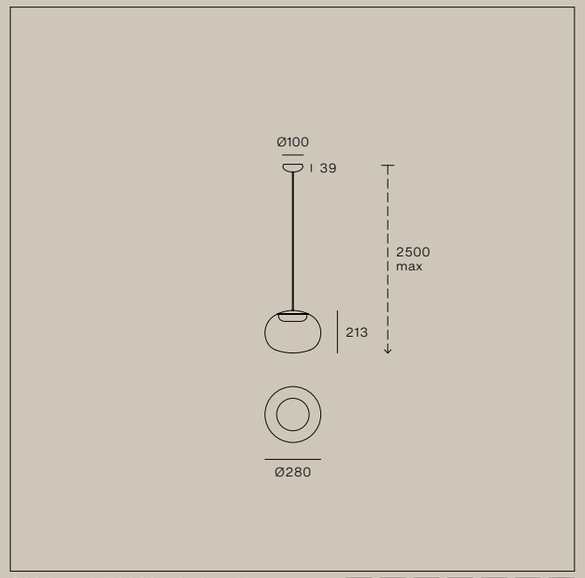

8624 **KIT0080** / CASAMBI
8625 PH-CUT / 1 art / in
8626 **KIT0026**
8627 PH-CUT / 1-9 art

IP20

La Mariée, Pendant

Code	Finish	Source	Input	Dimming	CCT (K)	Lm D	CRI	IP	Optic
8624	Polished Gold - Gold Glass	TopLED 9W	220-240V	Phase-cut	3000	423	90	20	Diffused
8625	Text. White - Transparent Glass	TopLED 9W	220-240V	Phase-cut	3000	423	90	20	Diffused
8626	Polished Black Nickel - Smoked Glass	TopLED 9W	220-240V	Phase-cut	3000	423	90	20	Diffused
8627	Polished Rose - Rose Glass	TopLED 9W	220-240V	Phase-cut	3000	423	90	20	Diffused

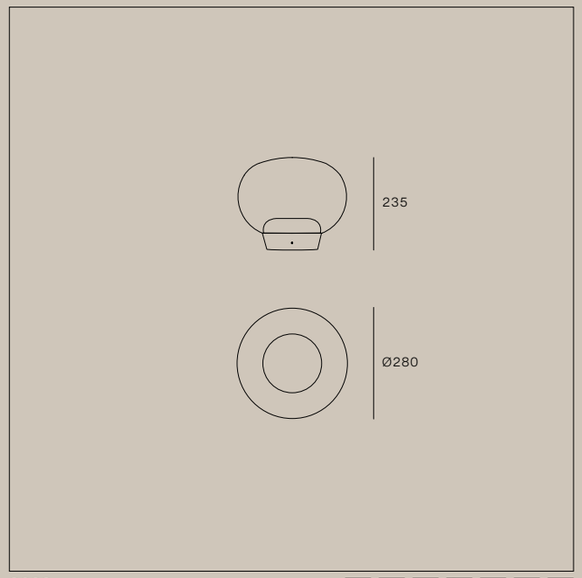

8628
8629
8630
8631

Push DIM
IP20

La Mariée, Table

Code	Finish	Source	Input	Dimming	CCT (K)	Lm D	CRI	IP	Optic
8628	Text. White - Transp. Glass	TopLED 9W	220-240V	Push DIM	3000	423	90	20	Diffused
8629	Text. Black - Smoked Glass	TopLED 9W	220-240V	Push DIM	3000	423	90	20	Diffused
8630	Text. White - Rose Glass	TopLED 9W	220-240V	Push DIM	3000	423	90	20	Diffused
8631	Text. White - Gold Glass	TopLED 9W	220-240V	Push DIM	3000	423	90	20	Diffused

Lampiatta

Pendant

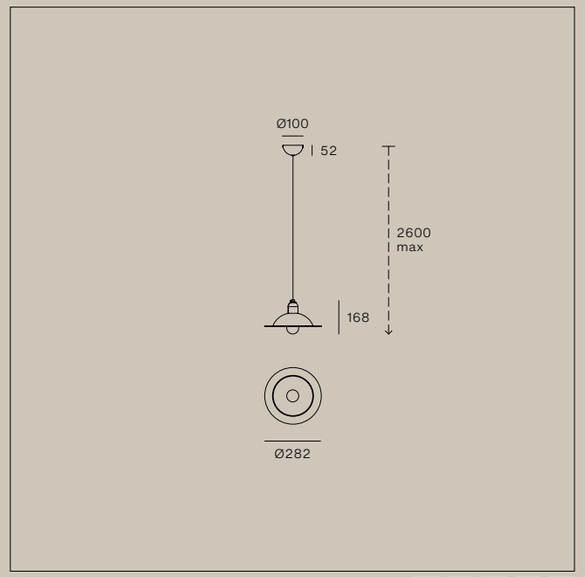

8983 **Included bulb**
8984 Classic A Retrofit
8985 LED Bulb E27 6W
8981
8982

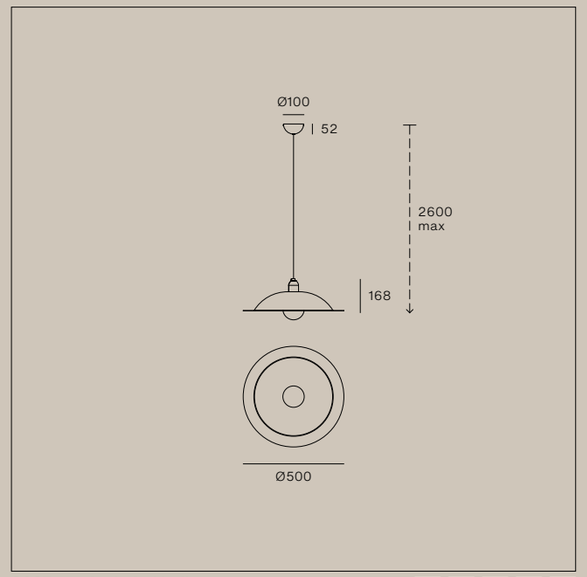

8987 **Included bulb**
8988 Classic Globe
8989 LED Bulb E27 11W
8990
8991

Lampiatta, Pendant

Code	Finish	Source	Input	Dimming	CCT (K)	Lm D	CRI	IP	Optic
8983	Polished Pure White	1xE27 6W	220-240V	No	2700	806	≥80	20	Diffused
8984	Polish. Black - Polish. Pure White	1xE27 6W	220-240V	No	2700	806	≥80	20	Diffused
8985	Polish. Orange - Polish. Pure White	1xE27 6W	220-240V	No	2700	806	≥80	20	Diffused
8981	Polish. Signal Yellow - Polish. Pure White	1xE27 6W	220-240V	No	2700	806	≥80	20	Diffused
8982	Polish. Mint Green - Polish. Pure White	1xE27 6W	220-240V	No	2700	806	≥80	20	Diffused
8987	Polished Pure White	1xE27 11W	220-240V	No	2700	1520	≥80	20	Diffused
8988	Polish. Black - Polish. Pure White	1xE27 11W	220-240V	No	2700	1520	≥80	20	Diffused
8989	Polish. Orange - Polish. Pure White	1xE27 11W	220-240V	No	2700	1520	≥80	20	Diffused
8990	Polish. Signal Yellow - Polish. Pure White	1xE27 11W	220-240V	No	2700	1520	≥80	20	Diffused
8991	Polish. Mint Green - Polish. Pure White	1xE27 11W	220-240V	No	2700	1520	≥80	20	Diffused

Lampiatta

Table

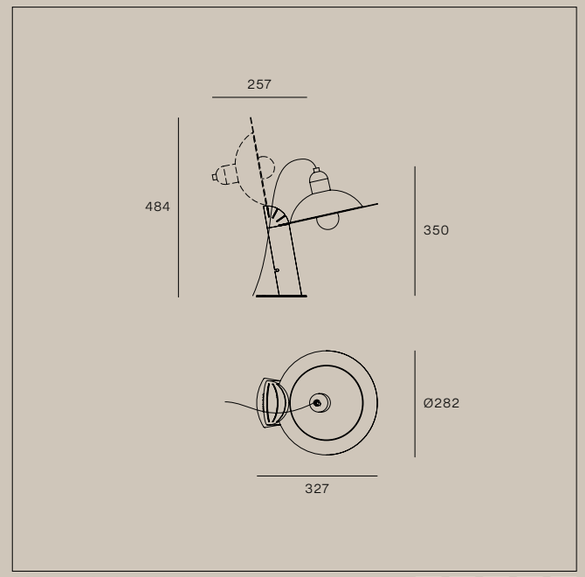

8971 **Included bulb**
8972 Classic A Mirror
8973 LED Bulb E27 6,5W

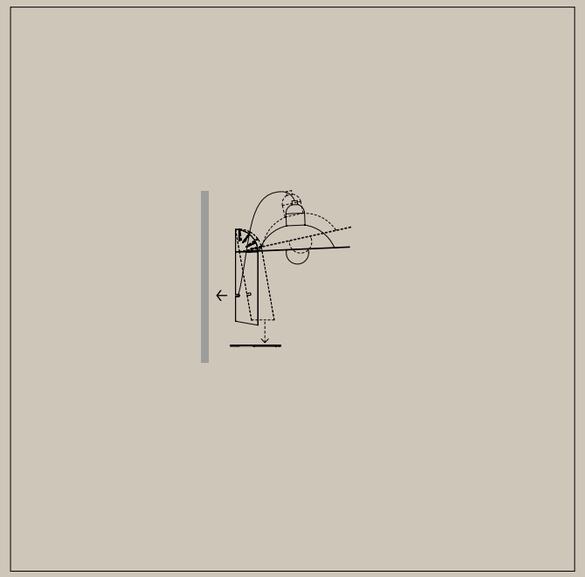

EN By removing the steel base from the body lamp, Lampiatta can be wall mounted.
IT Rimuovendo la base d'acciaio, Lampiatta può essere installata a parete.
FR Si vous retirez la base en acier, Lampiatta peut être fixée au mur.
DE Durch Entfernen des Stahlsockels kann Lampiatta an der Wand montiert werden.
ES Lampiatta se puede instalar en pared retirando la base de acero del cuerpo de la lámpara.

Lampiatta, Table

Code	Finish	Source	Input	Dimming	CCT (K)	Lm D	CRI	IP	Optic
8971	Polished White	1xE27 6,5W	220-240V	No	2700	650	≥80	20	Diffused
8972	Polished Black - Polished White	1xE27 6,5W	220-240V	No	2700	650	≥80	20	Diffused
8973	Polish. Red Iconic - Polish. White	1xE27 6,5W	220-240V	No	2700	650	≥80	20	Diffused

Luna Pendant

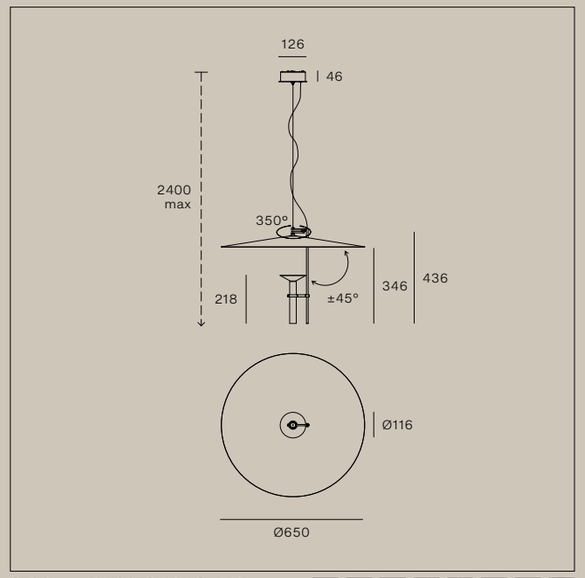

9703 **KIT0079** / CASAMBI
9703M DALI / 1 art / out
9705
9705M

Luna Floor

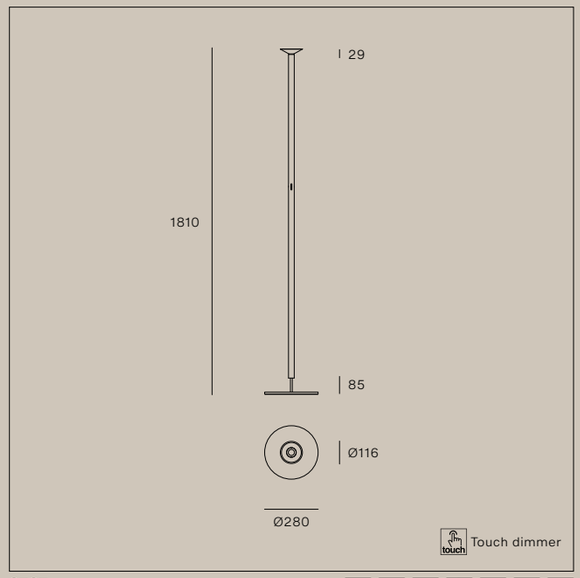

9707
9707M
9709
9709M

Luna, Pendant

Code	Finish	Source	Input	Dimming	CCT (K)	Lm D	CRI	IP	Optic
9703	Text. White - Chrome	TopLED 27W	220-240V	DALI Push	3000	1623	90	20	Diffused
9703M	Text. White - Chrome	TopLED 27W	220-240V	DALI Push	2700	1510	90	20	Diffused
9705	Text. Black - Polished Gold	TopLED 27W	220-240V	DALI Push	3000	1623	90	20	Diffused
9705M	Text. Black - Polished Gold	TopLED 27W	220-240V	DALI Push	2700	1510	90	20	Diffused

Luna, Floor

Code	Finish	Source	Input	Dimming	CCT (K)	Lm D	CRI	IP	Optic
9707	Text. White - Chrome	TopLED 27W	220-240V	Touch	3000	2041	90	20	Diffused
9707M	Text. White - Chrome	TopLED 27W	220-240V	Touch	2700	1898	90	20	Diffused
9709	Text. Black - Polished Gold	TopLED 27W	220-240V	Touch	3000	2041	90	20	Diffused
9709M	Text. Black - Polished Gold	TopLED 27W	220-240V	Touch	2700	1898	90	20	Diffused

Megafono — Pendant

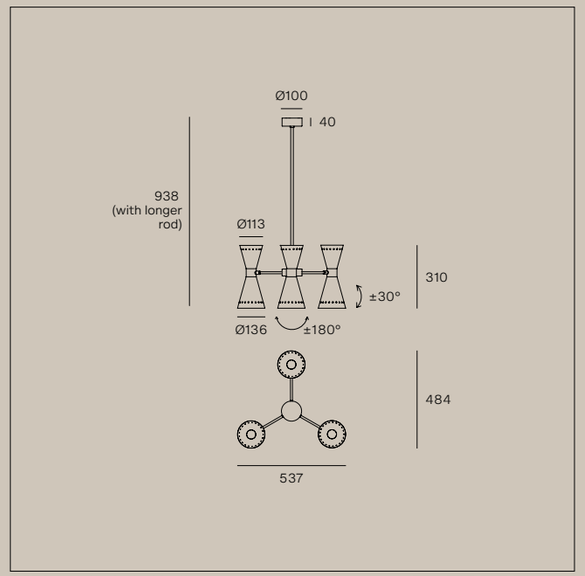

9576 **Included bulb**
9577 Miniglobo P45
LED Bulb E14 6,5W

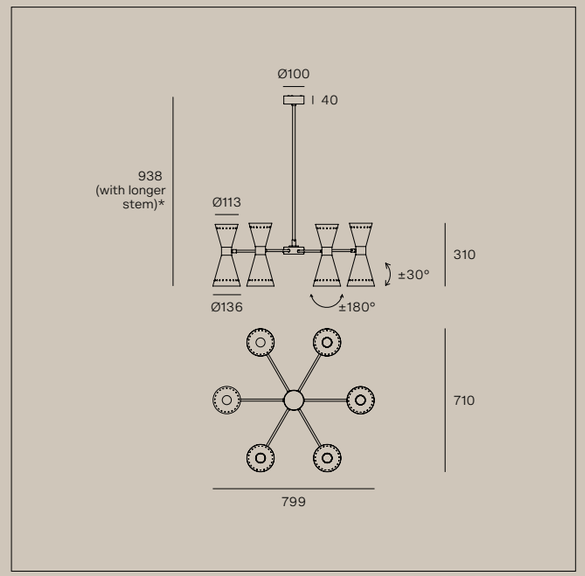

9568 **Included bulb**
9569 Miniglobo P45
LED Bulb E14 6,5W

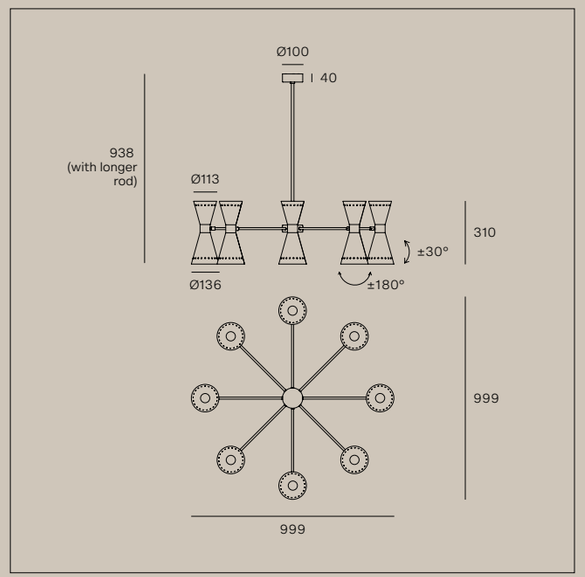

9566 **Included bulb**
9567 Miniglobo P45
LED Bulb E14 6,5W

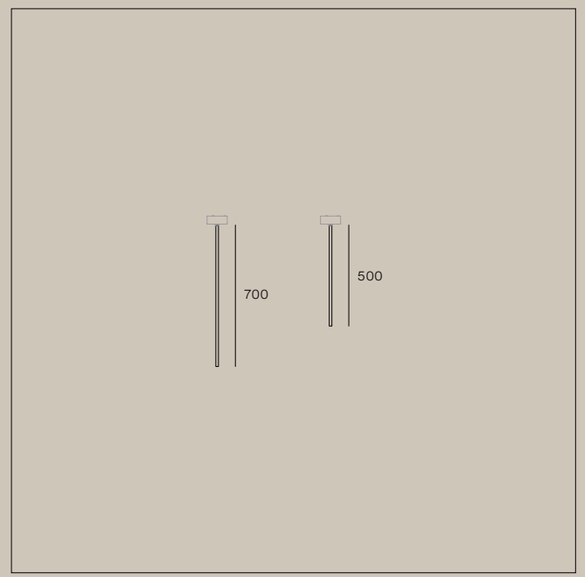

EN **2 rod sizes included**
IT **2 misure di asta incluse**
FR **2 tailles de tige incluses**
DE **2 Stabgrößen enthalten**
ES **2 tamaños de varilla incluidos**

Megafono, Pendant

Code	Finish	Source	Input	Dimming	CCT (K)	Lm D	CRI	IP	Optic
9576	Polish. Black - Polish. Gold	6xE14 6,5W	220-240V	No	2700	4836	≥80	20	Diffused
9577	Polish. Ivory - Polish. Gold	6xE14 6,5W	220-240V	No	2700	4836	≥80	20	Diffused
9568	Polish. Black - Polish. Gold	12xE14 6,5W	220-240V	No	2700	9672	≥80	20	Diffused
9569	Polish. Ivory - Polish. Gold	12xE14 6,5W	220-240V	No	2700	9672	≥80	20	Diffused
9566	Polish. Black - Polish. Gold	16xE14 6,5W	220-240V	No	2700	12896	≥80	20	Diffused
9567	Polish. Ivory - Polish. Gold	16xE14 6,5W	220-240V	No	2700	12896	≥80	20	Diffused

Megafono — Wall

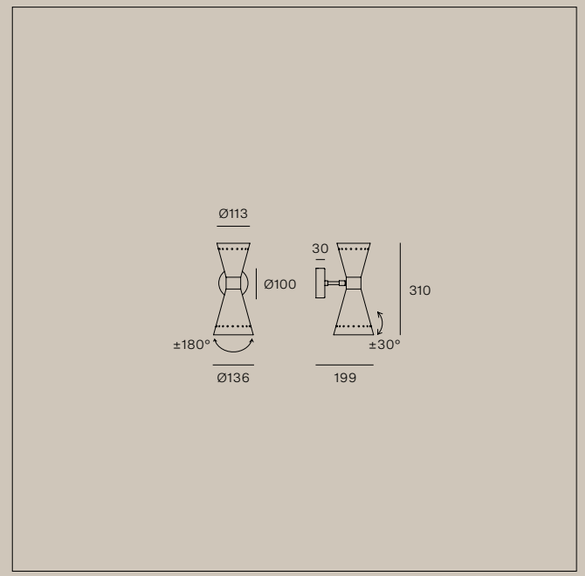

9570 **Included bulb**
9571 Miniglobo P45
LED Bulb E14 6,5W

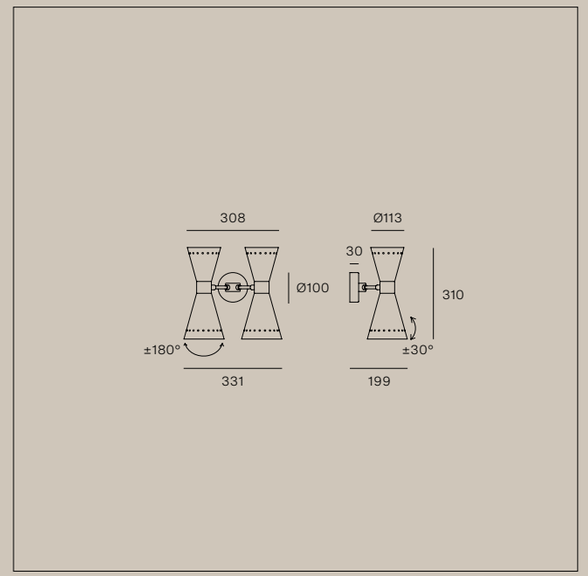

9572 **Included bulb**
9573 Miniglobo P45
LED Bulb E14 6,5W

Megafono, Wall

Code	Finish	Source	Input	Dimming	CCT (K)	Lm D	CRI	IP	Optic
9570	Polish. Black - Polish. Gold	2xE14 6,5W	220-240V	No	2700	1612	≥80	20	Diffused
9571	Polish. Ivory - Polish. Gold	2xE14 6,5W	220-240V	No	2700	1612	≥80	20	Diffused
9572	Polish. Black - Polish. Gold	4xE14 6,5W	220-240V	No	2700	3224	≥80	20	Diffused
9573	Polish. Ivory - Polish. Gold	4xE14 6,5W	220-240V	No	2700	3224	≥80	20	Diffused

Megafono **Table**

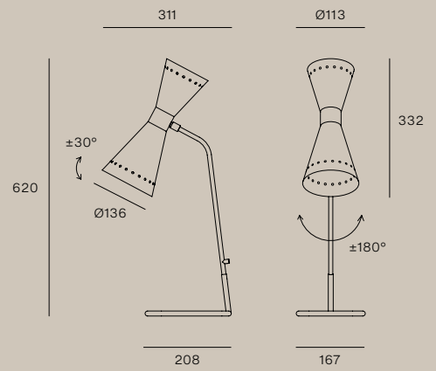

9574 **Included bulb**
9575 Miniglobo P45
LED Bulb E14 6,5W

IP20

Megafono, Table

Code	Finish	Source	Input	Dimming	CCT (K)	Lm D	CRI	IP	Optic
9574	Polish. Black - Polish. Gold	2xE14 6,5W	220-240V	No	2700	1612	≥80	20	Diffused
9575	Polish. Ivory - Polish. Gold	2xE14 6,5W	220-240V	No	2700	1612	≥80	20	Diffused

Meta **Table**

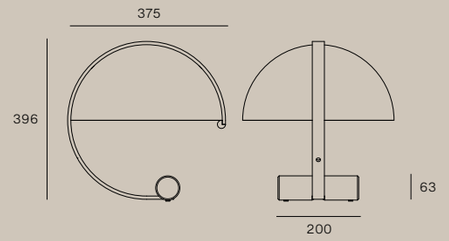

9698 **Included bulb**
9699 Classic A 150 Dimmable
9700 LED Bulb E27 18W
9701
9702



Meta, Table

Code	Finish	Source	Input	Dimming	CCT (K)	Lm D	CRI	IP	Optic
9698	Polished Pure White - Text. White - White Glass	1xE27 18W	220-240V	Push DIM	2700	2452	≥80	20	Diffused
9699	Polished Black - Text. Black - White Glass	1xE27 18W	220-240V	Push DIM	2700	2452	≥80	20	Diffused
9700	Polished Red Iconic - Text. Black - White Glass	1xE27 18W	220-240V	Push DIM	2700	2452	≥80	20	Diffused
9701	Brushed Gold - Text. Black - White Glass	1xE27 18W	220-240V	Push DIM	2700	2452	≥80	20	Diffused
9702	Brushed Nickel - Text. Black - White Glass	1xE27 18W	220-240V	Push DIM	2700	2452	≥80	20	Diffused

Minibox Wall

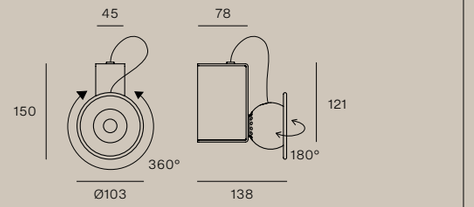

9275 **KIT0080 / CASAMBI**
9275M PH-CUT / 1 art / out
9276 **KIT0026**
9276M PH-CUT / 1-9 art
9277
9277M
9278
9278M
9279
9279M

Minibox, Wall

Code	Finish	Source	Input	Dimming	CCT (K)	Lm D	CRI	IP	Optic
9275	Polished Pure White	PowerLED 10W	220-240V	Phase-cut	3000	545	90	20	M.W.Flood
9275M	Polished Pure White	PowerLED 10W	220-240V	Phase-cut	2700	518	90	20	M.W.Flood
9276	Polished Black	PowerLED 10W	220-240V	Phase-cut	3000	545	90	20	M.W.Flood
9276M	Polished Black	PowerLED 10W	220-240V	Phase-cut	2700	518	90	20	M.W.Flood
9277	Polished Toffee	PowerLED 10W	220-240V	Phase-cut	3000	545	90	20	M.W.Flood
9277M	Polished Toffee	PowerLED 10W	220-240V	Phase-cut	2700	518	90	20	M.W.Flood
9278	Polished Green	PowerLED 10W	220-240V	Phase-cut	3000	545	90	20	M.W.Flood
9278M	Polished Green	PowerLED 10W	220-240V	Phase-cut	2700	518	90	20	M.W.Flood
9279	Polished Red	PowerLED 10W	220-240V	Phase-cut	3000	545	90	20	M.W.Flood
9279M	Polished Red	PowerLED 10W	220-240V	Phase-cut	2700	518	90	20	M.W.Flood

Minibox Table

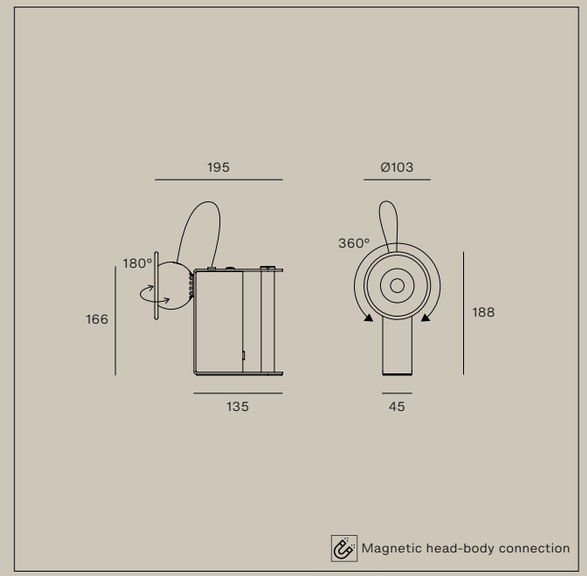

9285
9285M
9286
9286M
9287
9287M
9288
9288M
9289
9289M

Minibox, Table

Code	Finish	Source	Input	Dimming	CCT (K)	Lm D	CRI	IP	Optic
9285	Polished Pure White	PowerLED 10W	220-240V	Push DIM	3000	545	90	20	M.W.Flood
9285M	Polished Pure White	PowerLED 10W	220-240V	Push DIM	2700	518	90	20	M.W.Flood
9286	Polished Black	PowerLED 10W	220-240V	Push DIM	3000	545	90	20	M.W.Flood
9286M	Polished Black	PowerLED 10W	220-240V	Push DIM	2700	518	90	20	M.W.Flood
9287	Polished Toffee	PowerLED 10W	220-240V	Push DIM	3000	545	90	20	M.W.Flood
9287M	Polished Toffee	PowerLED 10W	220-240V	Push DIM	2700	518	90	20	M.W.Flood
9288	Polished Green	PowerLED 10W	220-240V	Push DIM	3000	545	90	20	M.W.Flood
9288M	Polished Green	PowerLED 10W	220-240V	Push DIM	2700	518	90	20	M.W.Flood
9289	Polished Red	PowerLED 10W	220-240V	Push DIM	3000	545	90	20	M.W.Flood
9289M	Polished Red	PowerLED 10W	220-240V	Push DIM	2700	518	90	20	M.W.Flood

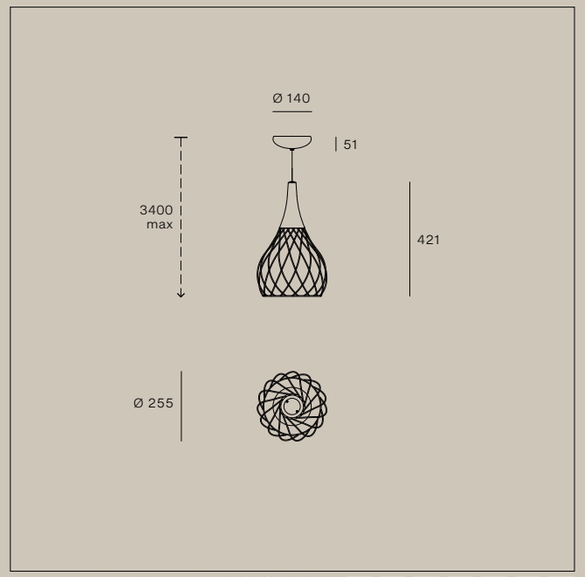

CZ030DPWMDI **KIT0080** / CASAMBI
CZ030DBCMDI PH-CUT / 1 art / in
CZ030DCPMDI **KIT0026**
CZ030DUSMDI PH-CUT / 1-5 art
CZ030DPQMDI

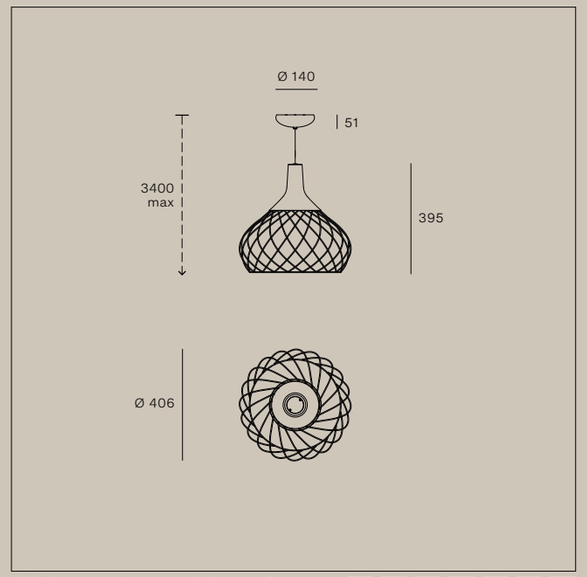

CZ031DPWMDI **KIT0080** / CASAMBI
CZ031DBCMDI PH-CUT / 1 art / in
CZ031DCPMDI **KIT0026**
CZ031DUSMDI PH-CUT / 1-5 art
CZ031DPQMDI

Mongolfier, Pendant

Code	Finish	Source	Input	Dimming	CCT (K)	Lm D	CRI	IP	Optic
CZ030DPWMDI	Polished Off-White	ArrayLED 19W	220-240V	Phase-cut	2700	1055	90	20	Diffused
CZ030DBCMDI	Polished Black Nickel	ArrayLED 19W	220-240V	Phase-cut	2700	1055	90	20	Diffused
CZ030DCPMDI	Polished Copper	ArrayLED 19W	220-240V	Phase-cut	2700	1055	90	20	Diffused
CZ030DUSMDI	Polished Bordeaux	ArrayLED 19W	220-240V	Phase-cut	2700	1055	90	20	Diffused
CZ030DPQMDI	Polished Petrol	ArrayLED 19W	220-240V	Phase-cut	2700	1055	90	20	Diffused
CZ031DPWMDI	Polished Off-White	ArrayLED 19W	220-240V	Phase-cut	2700	1055	90	20	Diffused
CZ031DBCMDI	Polished Black Nickel	ArrayLED 19W	220-240V	Phase-cut	2700	1055	90	20	Diffused
CZ031DCPMDI	Polished Copper	ArrayLED 19W	220-240V	Phase-cut	2700	1055	90	20	Diffused
CZ031DUSMDI	Polished Bordeaux	ArrayLED 19W	220-240V	Phase-cut	2700	1055	90	20	Diffused
CZ031DPQMDI	Polished Petrol	ArrayLED 19W	220-240V	Phase-cut	2700	1055	90	20	Diffused

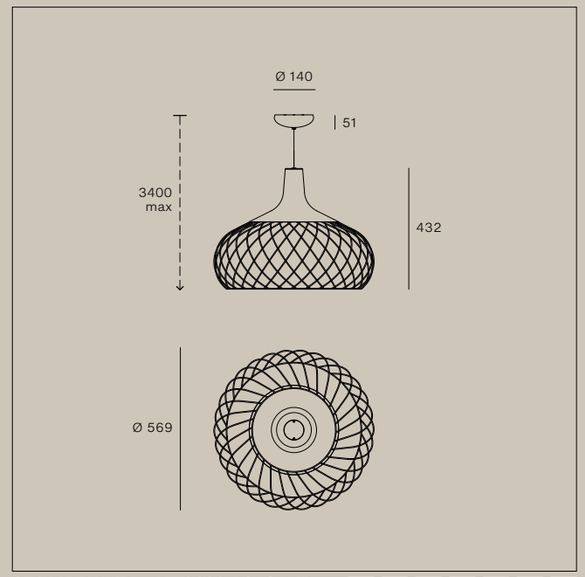

CZ032DPWMDI **KIT0080** / CASAMBI
CZ032DBCMDI PH-CUT / 1 art / in
CZ032DCPMDI **KIT0026**
CZ032DUSMDI PH-CUT / 1-2 art
CZ032DPQMDI

Mongolfier, Pendant

Code	Finish	Source	Input	Dimming	CCT (K)	Lm D	CRI	IP	Optic
CZ032DPWMDI	Polished Off-White	ArrayLED 35W	220-240V	Phase-cut	2700	1943	90	20	Diffused
CZ032DBCMDI	Polished Black Nickel	ArrayLED 35W	220-240V	Phase-cut	2700	1943	90	20	Diffused
CZ032DCPMDI	Polished Copper	ArrayLED 35W	220-240V	Phase-cut	2700	1943	90	20	Diffused
CZ032DUSMDI	Polished Bordeaux	ArrayLED 35W	220-240V	Phase-cut	2700	1943	90	20	Diffused
CZ032DPQMDI	Polished Petrol	ArrayLED 35W	220-240V	Phase-cut	2700	1943	90	20	Diffused

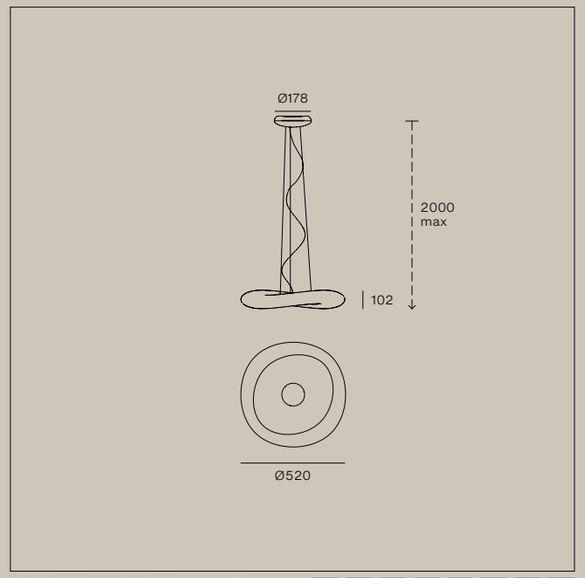

8005 **KIT0079** / CASAMBI
8005M DALI / 1 art / in

8135 **KIT0080** / CASAMBI
8135M PH-CUT / 1 art / in
KIT0026
PH-CUT / 1-4 art

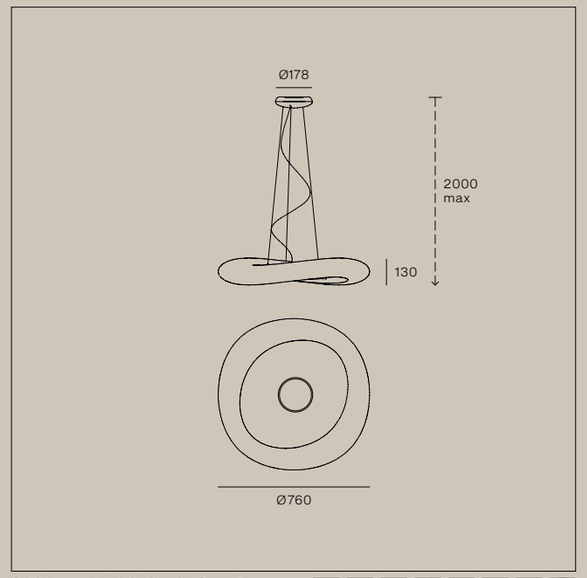

8007 **KIT0079** / CASAMBI
8007M DALI / 1 art / in

KIT0080 / CASAMBI

8137 PH-CUT / 1 art / in
8137M **KIT0026**
PH-CUT / 1-3 art

Mr. Magoo, Pendant

Code	Finish	Source	Input	Dimming	CCT (K)	Lm D	CRI	IP	Optic
8005	White Polyethylene	TopLED 23W	220-240V	DALI Push	3000	1651	90	20	Diffused
8005M	White Polyethylene	TopLED 23W	220-240V	DALI Push	2700	1568	90	20	Diffused
8135	White Polyethylene	TopLED 23W	220-240V	Phase-cut	3000	1651	90	20	Diffused
8135M	White Polyethylene	TopLED 23W	220-240V	Phase-cut	2700	1568	90	20	Diffused
8007	White Polyethylene	TopLED 32W	220-240V	DALI Push	3000	2117	90	20	Diffused
8007M	White Polyethylene	TopLED 32W	220-240V	DALI Push	2700	2011	90	20	Diffused
8137	White Polyethylene	TopLED 32W	220-240V	Phase-cut	3000	2117	90	20	Diffused
8137M	White Polyethylene	TopLED 32W	220-240V	Phase-cut	2700	2011	90	20	Diffused

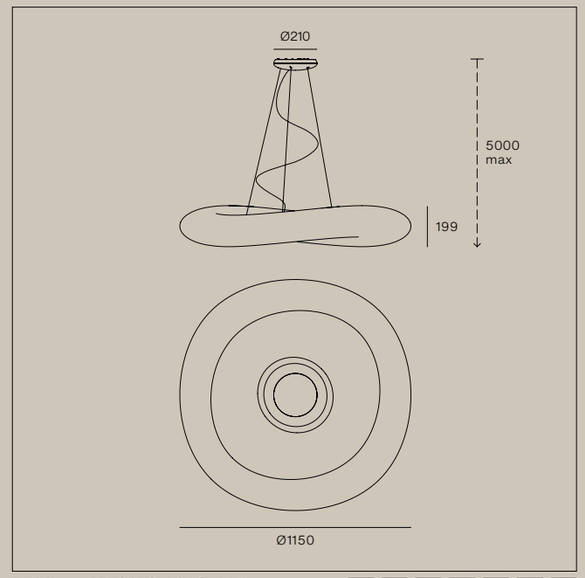

7788 **KIT0079** / CASAMBI
7788M DALI / 1 art / in

Mr. Magoo, Pendant

Code	Finish	Source	Input	Dimming	CCT (K)	Lm D	CRI	IP	Optic
7788	White Polyethylene	TopLED 96W	220-240V	DALI Push	3000	10894	90	20	Diffused
7788M	White Polyethylene	TopLED 96W	220-240V	DALI Push	2700	10349	90	20	Diffused

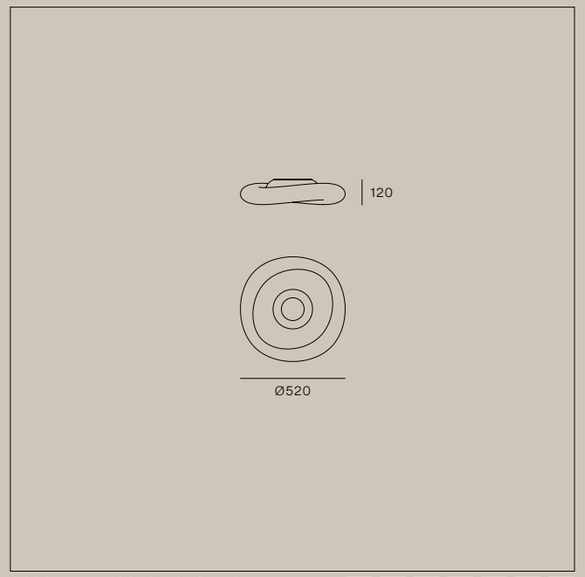

8006 **KIT0079** / CASAMBI
8006M DALI / 1 art / in

8136 **KIT0080** / CASAMBI
8136M PH-CUT / 1 art / in
KIT0026
PH-CUT / 1-4 art

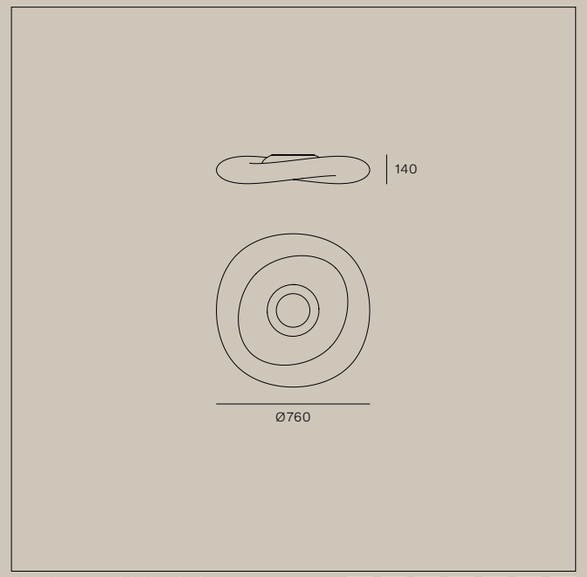

8008 **KIT0079** / CASAMBI
8008M DALI / 1 art / in

8138 **KIT0080** / CASAMBI
8138M PH-CUT / 1 art / in
KIT0026
PH-CUT / 1-3 art

Mr. Magoo, Ceiling

Code	Finish	Source	Input	Dimming	CCT (K)	Lm D	CRI	IP	Optic
8006	White Polyethylene	TopLED 23W	220-240V	DALI Push	3000	1651	90	40	Diffused
8006M	White Polyethylene	TopLED 23W	220-240V	DALI Push	2700	1568	90	40	Diffused
8136	White Polyethylene	TopLED 23W	220-240V	Phase-cut	3000	1651	90	40	Diffused
8136M	White Polyethylene	TopLED 23W	220-240V	Phase-cut	2700	1568	90	40	Diffused
8008	White Polyethylene	TopLED 32W	220-240V	DALI Push	3000	2117	90	40	Diffused
8008M	White Polyethylene	TopLED 32W	220-240V	DALI Push	2700	2011	90	40	Diffused
8138	White Polyethylene	TopLED 32W	220-240V	Phase-cut	3000	2117	90	40	Diffused
8138M	White Polyethylene	TopLED 32W	220-240V	Phase-cut	2700	2011	90	40	Diffused

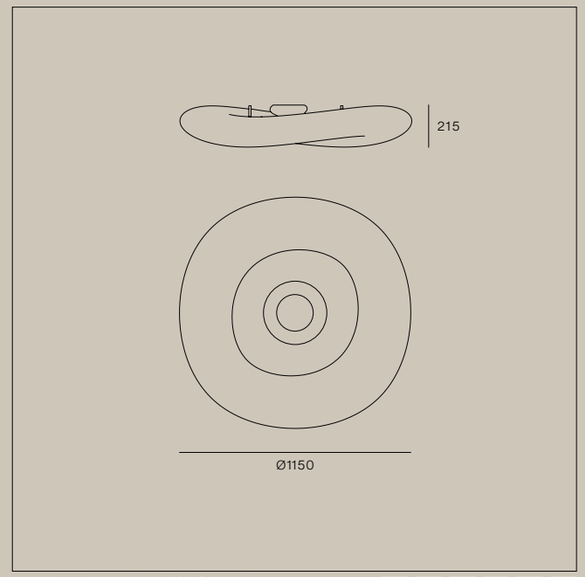

7789 **KIT0079** / CASAMBI
7789M DALI / 1 art / in

Mr. Magoo, Ceiling

Code	Finish	Source	Input	Dimming	CCT (K)	Lm D	CRI	IP	Optic
7789	White Polyethylene	TopLED 96W	220-240V	DALI Push	3000	10894	90	40	Diffused
7789M	White Polyethylene	TopLED 96W	220-240V	DALI Push	2700	10349	90	40	Diffused

Mr. Magoo **Floor**

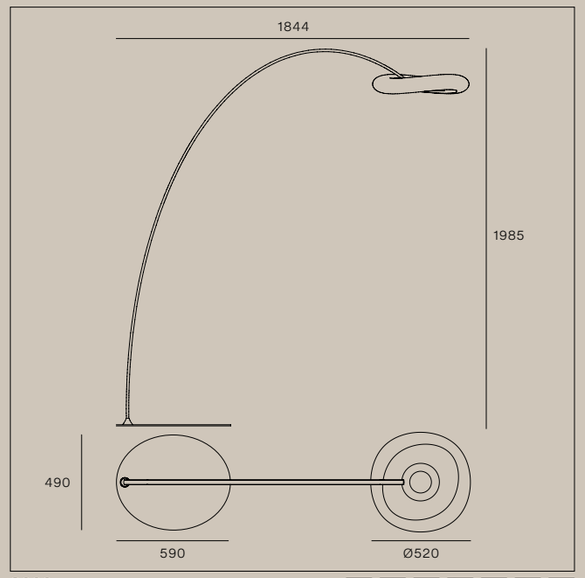

8009
8009M

Push DIM IP20

Mr. Magoo, Floor

Code	Finish	Source	Input	Dimming	CCT (K)	Lm D	CRI	IP	Optic
8009	Text. White - White Polyethylene	TopLED 23W	220-240V	Push DIM	3000	1651	90	20	Diffused
8009M	Text. White - White Polyethylene	TopLED 23W	220-240V	Push DIM	2700	1568	90	20	Diffused

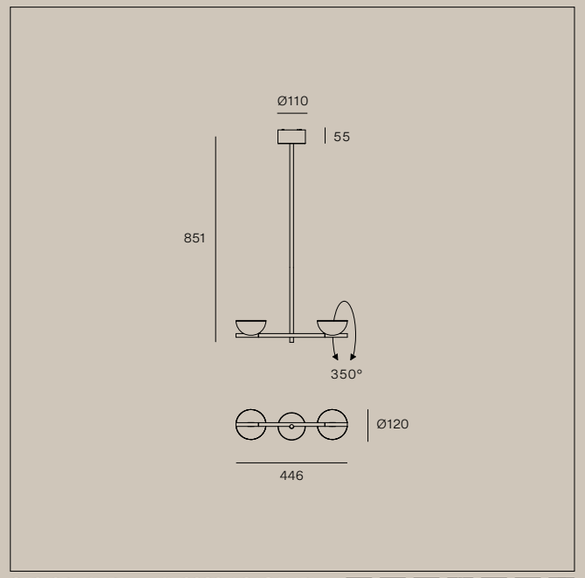

CZ010DLKMDI
CZ010DMUMDI
CZ010DWTMDI

KIT0080 / CASAMBI
PH-CUT / 1 art / in
KIT0026
PH-CUT / 1-3 art

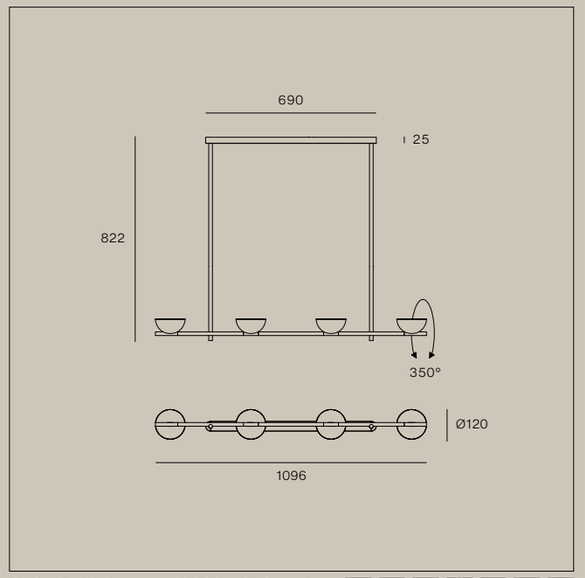

CZ011DLKMDI
CZ011DMUMDI
CZ011DWTMDI

KIT0080 / CASAMBI
PH-CUT / 1 art / in
KIT0026
PH-CUT / 1-2 art

Nido, Pendant

Code	Finish	Source	Input	Dimming	CCT (K)	Lm D	CRI	IP	Optic
CZ010DLKMDI	Polished Black - Textured Black	TopLED 27W	220-240V	Phase-cut	2700	1958	90	20	Diffused
CZ010DMUMDI	Polish. Mushroom - Text. Mushroom	TopLED 27W	220-240V	Phase-cut	2700	1958	90	20	Diffused
CZ010DWTMDI	Polished White - Textured White	TopLED 27W	220-240V	Phase-cut	2700	1958	90	20	Diffused
CZ011DLKMDI	Polished Black - Textured Black	TopLED 45W	220-240V	Phase-cut	2700	3263	90	20	Diffused
CZ011DMUMDI	Polish. Mushroom - Text. Mushroom	TopLED 45W	220-240V	Phase-cut	2700	3263	90	20	Diffused
CZ011DWTMDI	Polished White - Textured White	TopLED 45W	220-240V	Phase-cut	2700	3263	90	20	Diffused

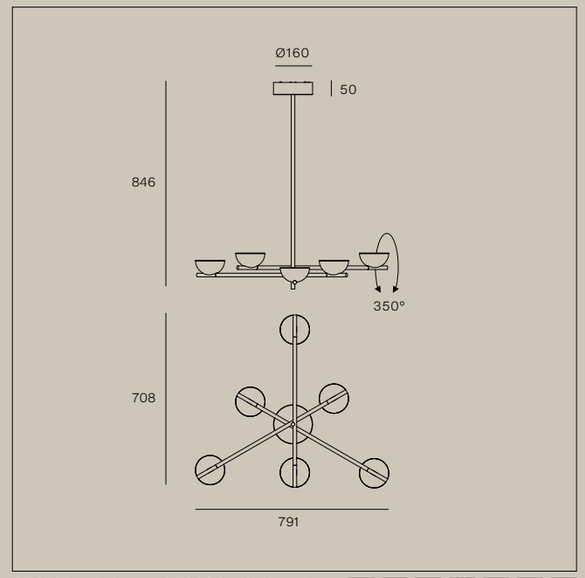

CZ012DLKMDI
CZ012DMUMDI
CZ012DWTMDI

KIT0080 / CASAMBI
PH-CUT / 1 art / in
KIT0026
PH-CUT / 1-2 art

Nido, Pendant

Code	Finish	Source	Input	Dimming	CCT (K)	Lm D	CRI	IP	Optic
CZ012DLKMDI	Polished Black - Textured Black	TopLED 54W	220-240V	Phase-cut	2700	3915	90	20	Diffused
CZ012DMUMDI	Polish. Mushroom - Text. Mushroom	TopLED 54W	220-240V	Phase-cut	2700	3915	90	20	Diffused
CZ012DWTMDI	Polished White - Textured White	TopLED 54W	220-240V	Phase-cut	2700	3915	90	20	Diffused

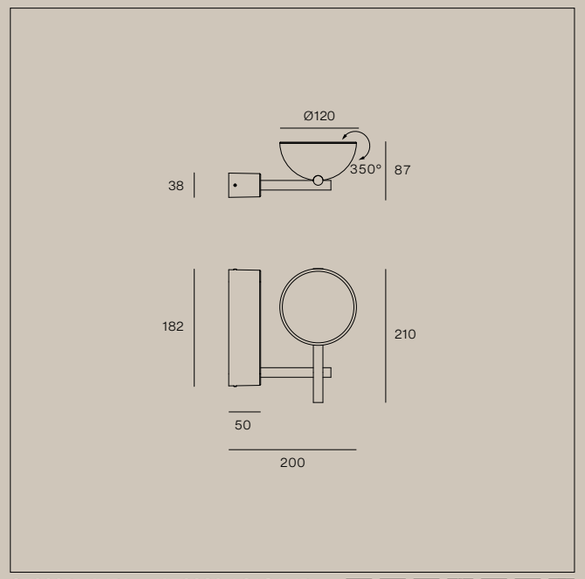

CZ009DLKMDI
CZ009DMUMDI
CZ009DWTMDI

KIT0080 / CASAMBI
PH-CUT / 1 art / in
KIT0026
PH-CUT / 1-4 art

IP20

Nido, Wall

Code	Finish	Source	Input	Dimming	CCT (K)	Lm D	CRI	IP	Optic
CZ009DLKMDI	Polished Black - Textured Black	TopLED 23W	220-240V	Phase-cut	2700	1666	90	20	Diffused
CZ009DMUMDI	Polish. Mushroom - Text. Mushroom	TopLED 23W	220-240V	Phase-cut	2700	1666	90	20	Diffused
CZ009DWTMDI	Polished White - Textured White	TopLED 23W	220-240V	Phase-cut	2700	1666	90	20	Diffused

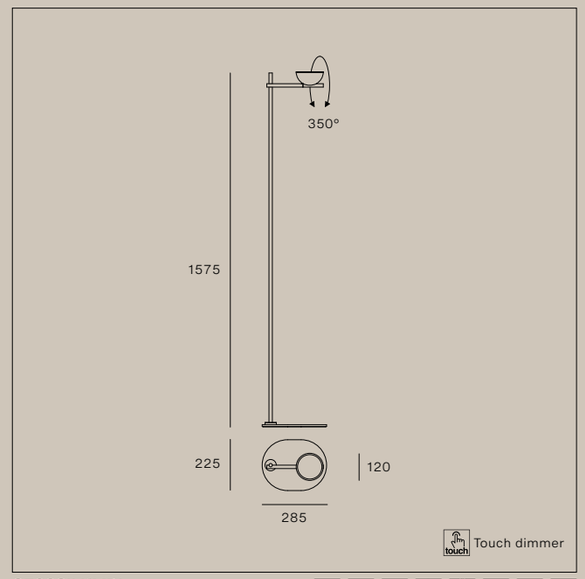

CZ028ILKMDI
CZ028IMUMDI
CZ028IWTMDI

IP20

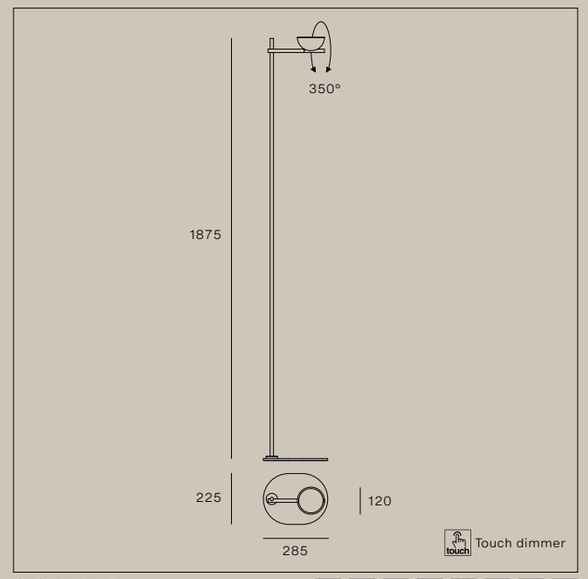

CZ013ILKMDI
CZ013IMUMDI
CZ013IWTMDI

IP20

Nido, Floor

Code	Finish	Source	Input	Dimming	CCT (K)	Lm D	CRI	IP	Optic
CZ028ILKMDI	Polished Black - Textured Black	TopLED 13W	220-240V	Touch	2700	942	90	20	Diffused
CZ028IMUMDI	Polish. Mushroom - Text. Mushroom	TopLED 13W	220-240V	Touch	2700	942	90	20	Diffused
CZ028IWTMDI	Polished White - Textured White	TopLED 13W	220-240V	Touch	2700	942	90	20	Diffused
CZ013ILKMDI	Polished Black - Textured Black	TopLED 28W	220-240V	Touch	2700	2024	90	20	Diffused
CZ013IMUMDI	Polish. Mushroom - Text. Mushroom	TopLED 28W	220-240V	Touch	2700	2024	90	20	Diffused
CZ013IWTMDI	Polished White - Textured White	TopLED 28W	220-240V	Touch	2700	2024	90	20	Diffused

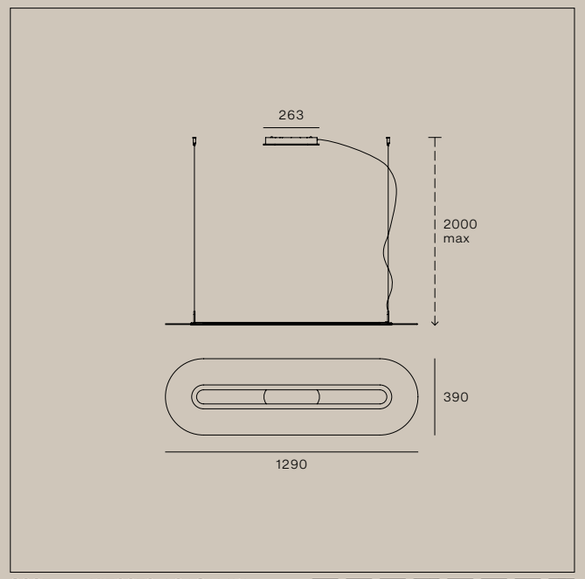

8037 **KIT0079** / CASAMBI
8038 DALI / 1 art / in

8490 **KIT0080** / CASAMBI
8491 PH-CUT / 1 art / in
KIT0026
PH-CUT / 1-2 art

Opti-line, Pendant

Code	Finish	Source	Input	Dimming	CCT (K)	Lm D	CRI	IP	Optic
8037	Text. White - Transparent PMMA	TopLED 47W	220-240V	DALI Push	3000	3649	90	20	Diffused
8038	Polish. Aluminium - Transparent PMMA	TopLED 47W	220-240V	DALI Push	3000	3649	90	20	Diffused
8490	Text. White - Transparent PMMA	TopLED 47W	220-240V	Phase-cut	3000	3649	90	20	Diffused
8491	Polish. Aluminium - Transparent PMMA	TopLED 47W	220-240V	Phase-cut	3000	3649	90	20	Diffused

Oxygen Pendant

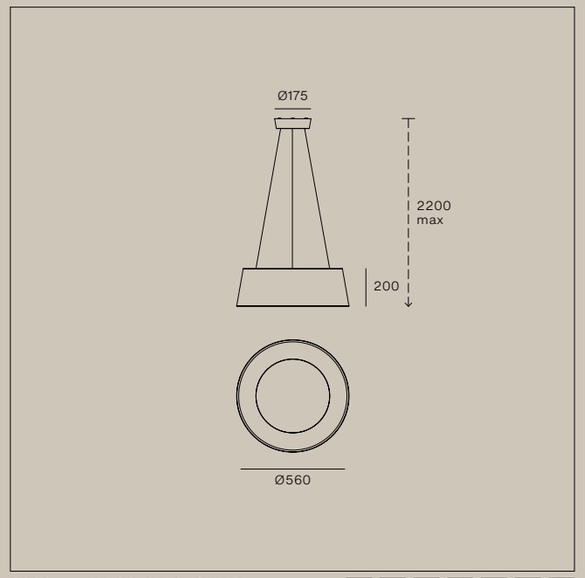

8089 **KIT0079** / CASAMBI
8090 DALI / 1 art / in

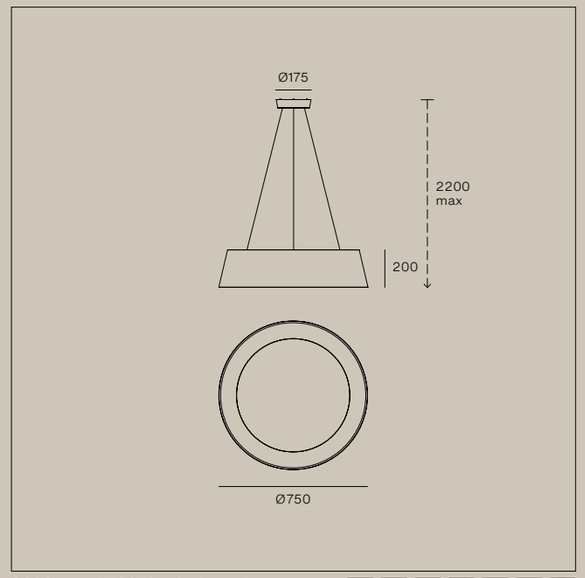

8093 **KIT0079** / CASAMBI
8094 DALI / 1 art / in

Oxygen, Pendant

Code	Finish	Source	Input	Dimming	CCT (K)	Lm D	CRI	IP	Optic
8089	White Polyurethane - Text. White	TopLED 36W	220-240 V	DALI Push	3000	2165	90	20	Diffused
8090	Black Polyurethane - Text. White	TopLED 36W	220-240 V	DALI Push	3000	2165	90	20	Diffused
8093	White Polyurethane - Text. White	TopLED 50W	220-240 V	DALI Push	3000	3255	90	20	Diffused
8094	Black Polyurethane - Text. White	TopLED 50W	220-240 V	DALI Push	3000	3255	90	20	Diffused

Oxygen Wall

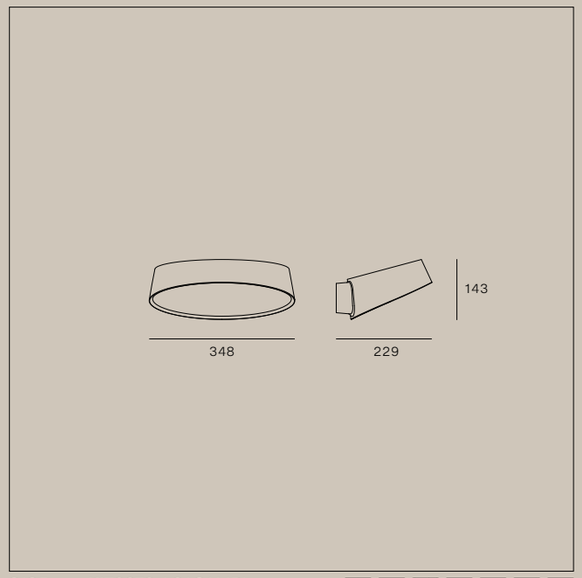

8185 **KIT0079** / CASAMBI
8186 DALI / 1 art / in

8495 **KIT0080** / CASAMBI
8496 PH-CUT / 1 art / in
KIT0026
PH-CUT / 1-5 art

Oxygen, Wall

Code	Finish	Source	Input	Dimming	CCT (K)	Lm D	CRI	IP	Optic
8185	White Polyurethane - Text. White	TopLED 17W	220-240 V	DALI	3000	789	90	40	Diffused
8186	Black Polyurethane - Text. White	TopLED 17W	220-240 V	DALI	3000	789	90	40	Diffused
8495	White Polyurethane - Text. White	TopLED 17W	220-240 V	Phase-cut	3000	789	90	40	Diffused
8496	Black Polyurethane - Text. White	TopLED 17W	220-240 V	Phase-cut	3000	789	90	40	Diffused

Oxygen **Floor**

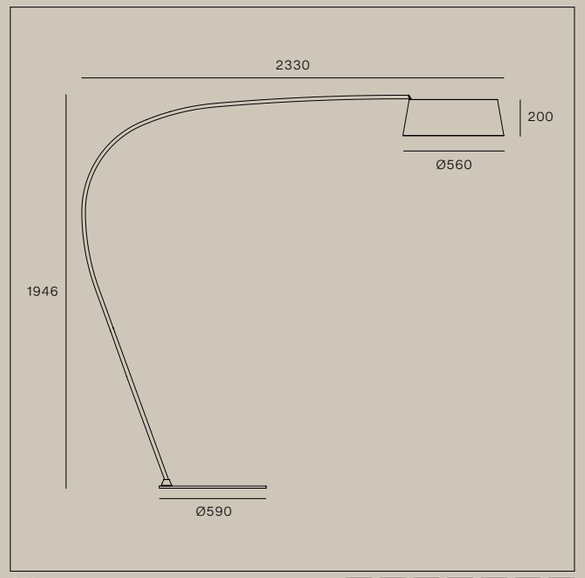

8101
8102

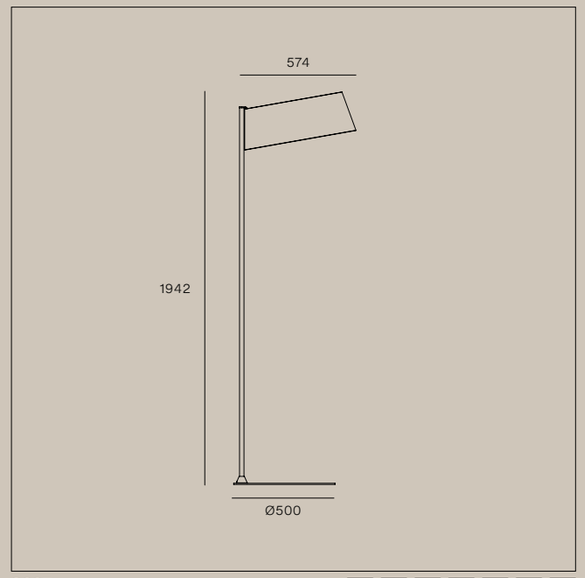

8097
8098

Oxygen, Floor

Code	Finish	Source	Input	Dimming	CCT (K)	Lm D	CRI	IP	Optic
8101	White Polyurethane - Text. White	TopLED 36W	220-240 V	Push DIM	3000	2165	90	20	Diffused
8102	Black Polyurethane - Text. White	TopLED 36W	220-240 V	Push DIM	3000	2165	90	20	Diffused
8097	White Polyurethane - Text. White	TopLED 36W	220-240 V	Push DIM	3000	2165	90	20	Diffused
8098	Black Polyurethane - Text. White	TopLED 36W	220-240 V	Push DIM	3000	2165	90	20	Diffused

Papylia Pendant

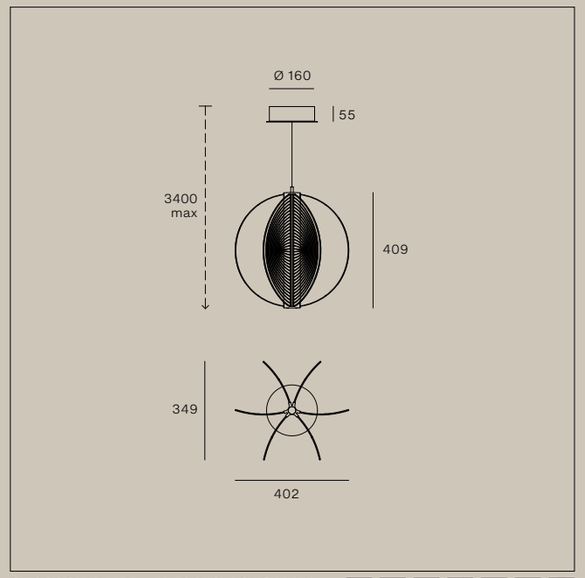

CZ022CWDMDI
CZ022CMSMDI
CZ022CPZMDI

KIT0079 / CASAMBI
DALI / 1 art / in

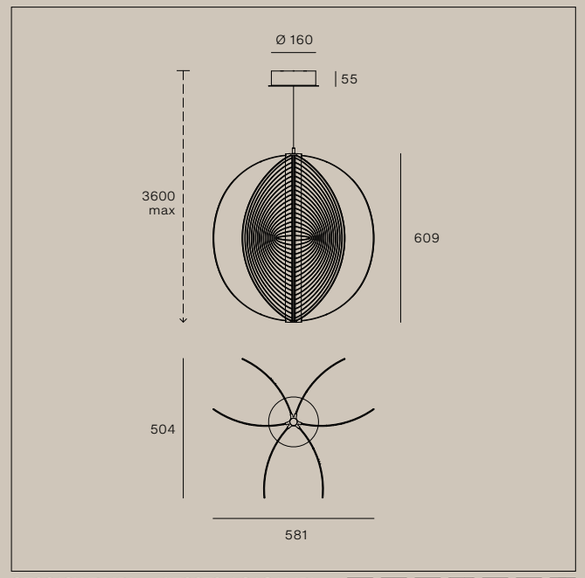

CZ021CWDMDI
CZ021CMSMDI
CZ021CPZMDI

KIT0079 / CASAMBI
DALI / 1 art / in

Papylia, Pendant

Code	Finish	Source	Input	Dimming	CCT (K)	Lm D	CRI	IP	Optic
CZ022CWDMDI	Polished White	TopLED 44W	220-240V	DALI Push	2700	2664	90	20	Diffused
CZ022CMSMDI	Polished Mushroom	TopLED 44W	220-240V	DALI Push	2700	2664	90	20	Diffused
CZ022CPZMDI	Polished Dark Bronze	TopLED 44W	220-240V	DALI Push	2700	2664	90	20	Diffused
CZ021CWDMDI	Polished White	TopLED 55W	220-240V	DALI Push	2700	3301	90	20	Diffused
CZ021CMSMDI	Polished Mushroom	TopLED 55W	220-240V	DALI Push	2700	3301	90	20	Diffused
CZ021CPZMDI	Polished Dark Bronze	TopLED 55W	220-240V	DALI Push	2700	3301	90	20	Diffused

Papylia Ceiling

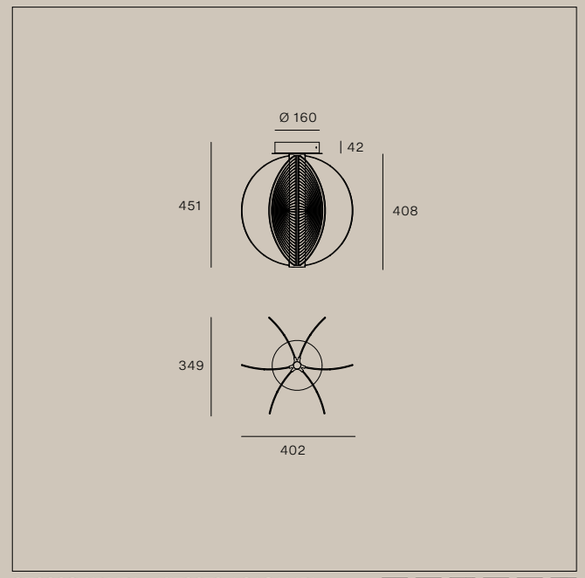

CZ026CWDMDI
CZ026CMSMDI
CZ026CPZMDI

KIT0079 / CASAMBI
DALI / 1 art / in

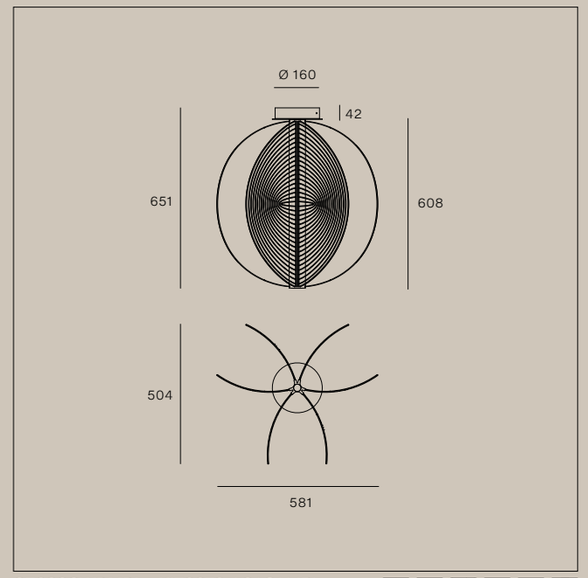

CZ033CWDMDI
CZ033CMSMDI
CZ033CPZMDI

KIT0079 / CASAMBI
DALI / 1 art / in

Papylia, Ceiling

Code	Finish	Source	Input	Dimming	CCT (K)	Lm D	CRI	IP	Optic
CZ026CWDMDI	Polished White	TopLED 44W	220-240V	DALI Push	2700	2664	90	20	Diffused
CZ026CMSMDI	Polished Mushroom	TopLED 44W	220-240V	DALI Push	2700	2664	90	20	Diffused
CZ026CPZMDI	Polished Dark Bronze	TopLED 44W	220-240V	DALI Push	2700	2664	90	20	Diffused
CZ033CWDMDI	Polished White	TopLED 55W	220-240V	DALI Push	2700	3301	90	20	Diffused
CZ033CMSMDI	Polished Mushroom	TopLED 55W	220-240V	DALI Push	2700	3301	90	20	Diffused
CZ033CPZMDI	Polished Dark Bronze	TopLED 55W	220-240V	DALI Push	2700	3301	90	20	Diffused

Papylia **Wall**

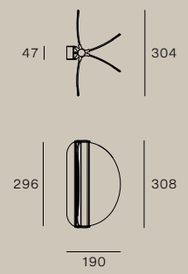

CZ023CWDMDI **KIT0079** / CASAMBI
CZ023CMSMDI DALI / 1 art / in
CZ023CPZMDI

Papylia, Wall

Code	Finish	Source	Input	Dimming	CCT (K)	Lm D	CRI	IP	Optic
CZ023CWDMDI	Polished White	TopLED 23W	220-240V	DALI Push	2700	1381	90	20	Diffused
CZ023CMSMDI	Polished Mushroom	TopLED 23W	220-240V	DALI Push	2700	1381	90	20	Diffused
CZ023CPZMDI	Polished Dark Bronze	TopLED 23W	220-240V	DALI Push	2700	1381	90	20	Diffused

Papylia **Table**

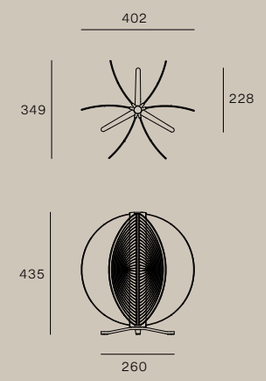

CZ025IWDMDI
CZ025IMSMDI
CZ025IPZMDI

Papylia, Table

Code	Finish	Source	Input	Dimming	CCT (K)	Lm D	CRI	IP	Optic
CZ025IWDMDI	Polished White	TopLED 32W	220-240V	Touch	2700	1922	90	20	Diffused
CZ025IMSMDI	Polished Mushroom	TopLED 32W	220-240V	Touch	2700	1922	90	20	Diffused
CZ025IPZMDI	Polished Dark Bronze	TopLED 32W	220-240V	Touch	2700	1922	90	20	Diffused

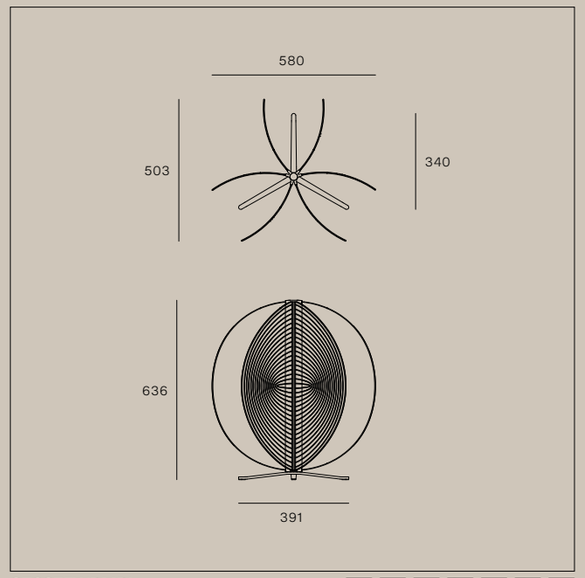

CZ027FWDMDI
CZ027FMSMDI
CZ027FPZMDI

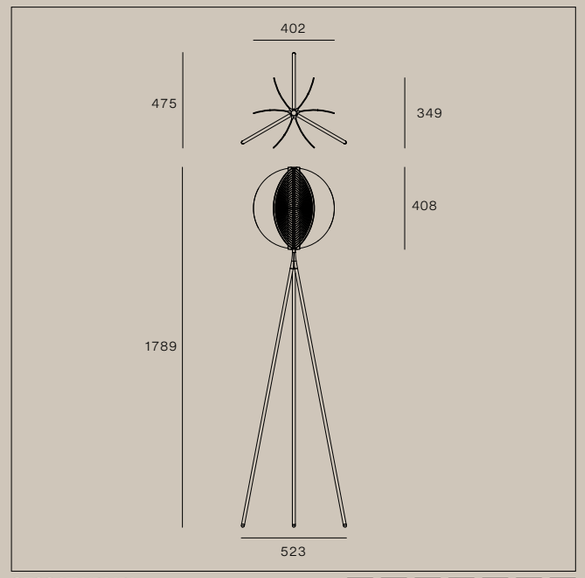

CZ024FWDMDI
CZ024FMSMDI
CZ024FPZMDI

Papylia, Floor

Code	Finish	Source	Input	Dimming	CCT (K)	Lm D	CRI	IP	Optic
CZ027FWDMDI	Polished White	TopLED 55W	220-240V	Push DIM	2700	3301	90	20	Diffused
CZ027FMSMDI	Polished Mushroom	TopLED 55W	220-240V	Push DIM	2700	3301	90	20	Diffused
CZ027FPZMDI	Polished Dark Bronze	TopLED 55W	220-240V	Push DIM	2700	3301	90	20	Diffused
CZ024FWDMDI	Polished White	TopLED 44W	220-240V	Push DIM	2700	2664	90	20	Diffused
CZ024FMSMDI	Polished Mushroom	TopLED 44W	220-240V	Push DIM	2700	2664	90	20	Diffused
CZ024FPZMDI	Polished Dark Bronze	TopLED 44W	220-240V	Push DIM	2700	2664	90	20	Diffused

Periscopio Table

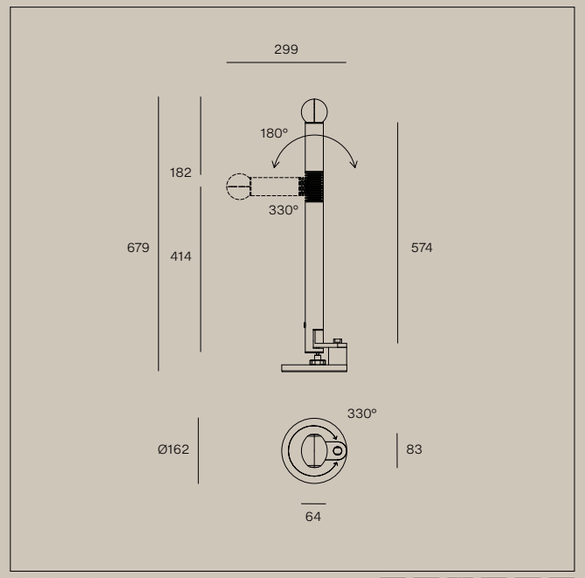

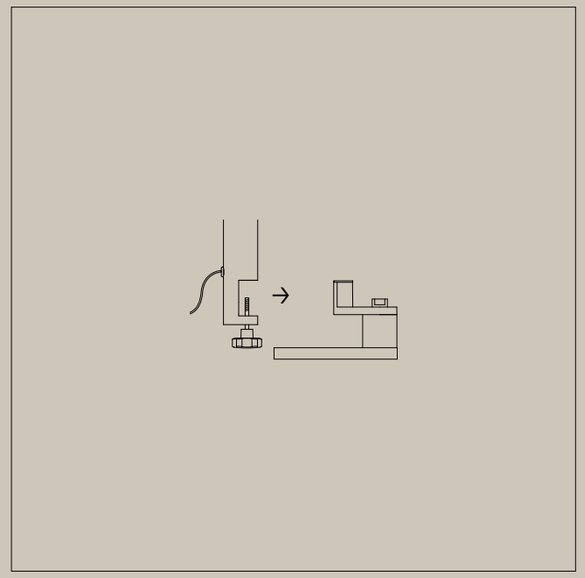

9055 **Included bulb**
9056 LED Bulb G9 7W
9057

IP20

EN By removing the metal base, Periscopio can be used as a clamp lamp.

IT Rimuovendo la base di metallo, Periscopio può essere utilizzata come lampada a morsetto.

FR Si vous retirez la base en métal, Periscopio peut être utilisé comme lampe à pince.

DE Wenn der Metallsockel entfernt wird, kann Periscopio als Klemmleuchte verwendet werden.

ES Periscopio se puede iutilizarse como lámpara de pinza retirando la base metálica.

Periscopio, Table

Code	Finish	Source	Input	Dimming	CCT (K)	Lm D	CRI	IP	Optic
9055	Polished Pure White	1xG9 7W	220-240V	No	3000	449	≥80	20	Diffused
9056	Polished Black	1xG9 7W	220-240V	No	3000	449	≥80	20	Diffused
9057	Polished Red Iconic	1xG9 7W	220-240V	No	3000	449	≥80	20	Diffused

Periscopio Floor

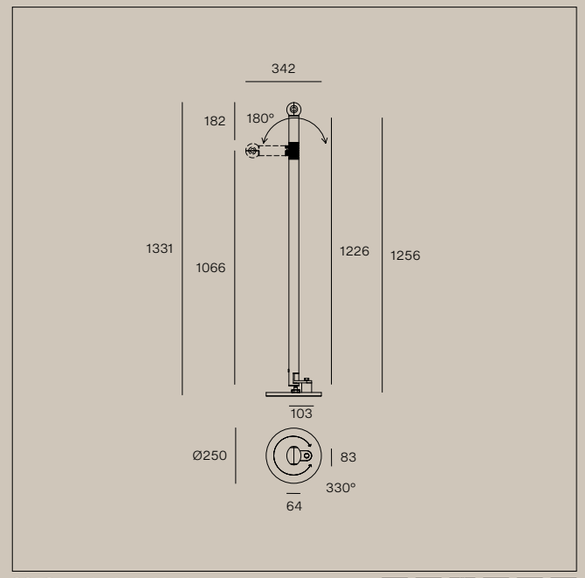

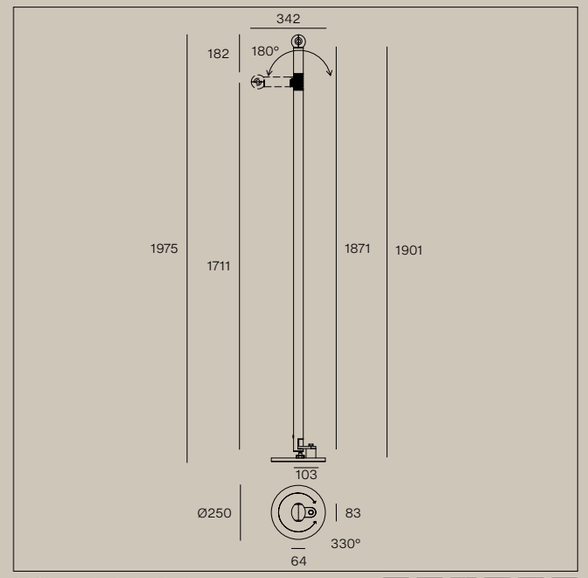

9058 **Included bulb**
9059 LED Bulb G9 7W
9060

IP20

9061 **Included bulb**
9062 LED Bulb G9 7W
9063

IP20

Periscopio, Floor

Code	Finish	Source	Input	Dimming	CCT (K)	Lm D	CRI	IP	Optic
9058	Polished Pure White	1xG9 7W	220-240V	No	3000	449	≥80	20	Diffused
9059	Polished Black	1xG9 7W	220-240V	No	3000	449	≥80	20	Diffused
9060	Polished Red Iconic	1xG9 7W	220-240V	No	3000	449	≥80	20	Diffused
9061	Polished Pure White	1xG9 7W	220-240V	No	3000	449	≥80	20	Diffused
9062	Polished Black	1xG9 7W	220-240V	No	3000	449	≥80	20	Diffused
9063	Polished Red Iconic	1xG9 7W	220-240V	No	3000	449	≥80	20	Diffused

Quad **Wall**

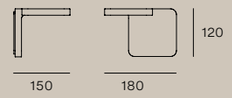

7750 **KIT0080** / CASAMBI
7750M PH-CUT / 1 art / in
7753 **KIT0026**
7753M PH-CUT / 1-9 art

IP40

Quad, Wall

Code	Finish	Source	Input	Dimming	CCT (K)	Lm D	CRI	IP	Optic
7750	Textured White	TopLED 11W	220-240V	Phase-cut	3000	1155	90	40	Diffused
7750M	Textured White	TopLED 11W	220-240V	Phase-cut	2700	1097	90	40	Diffused
7753	Textured Black	TopLED 11W	220-240V	Phase-cut	3000	1155	90	40	Diffused
7753M	Textured Black	TopLED 11W	220-240V	Phase-cut	2700	1097	90	40	Diffused

Reflexio Pendant

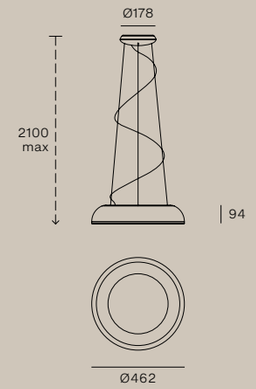

8536 **KIT0080** / CASAMBI
8536M PH-CUT / 1 art / in
8537 **KIT0026**
8537M PH-CUT / 1-2 art
8538
8538M

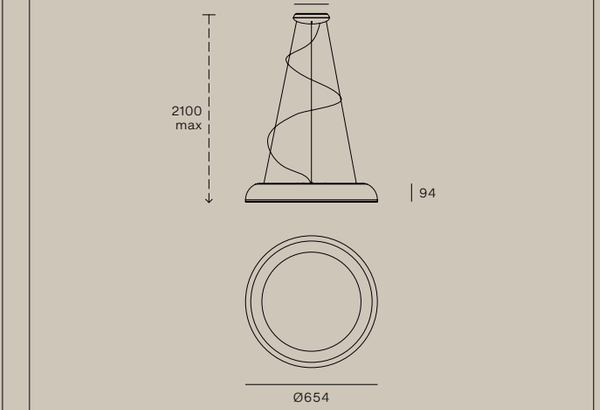

8539 **KIT0080** / CASAMBI
8539M PH-CUT / 1 art / in
8540 **KIT0026**
8540M PH-CUT / 1-2 art
8541
8541M

Reflexio, Pendant

Code	Finish	Source	Input	Dimming	CCT (K)	Lm D	CRI	IP	Optic
8536	Textured White	TopLED 35W	220-240V	Phase-cut	3000	1380	90	20	Diffused
8536M	Textured White	TopLED 35W	220-240V	Phase-cut	2700	1311	90	20	Diffused
8537	Text. Black - Text. White	TopLED 35W	220-240V	Phase-cut	3000	1380	90	20	Diffused
8537M	Text. Black - Text. White	TopLED 35W	220-240V	Phase-cut	2700	1311	90	20	Diffused
8538	Text. Chocolate - Text. White	TopLED 35W	220-240V	Phase-cut	3000	1380	90	20	Diffused
8538M	Text. Chocolate - Text. White	TopLED 35W	220-240V	Phase-cut	2700	1311	90	20	Diffused
8539	Textured White	TopLED 48W	220-240V	Phase-cut	3000	2556	90	20	Diffused
8539M	Textured White	TopLED 48W	220-240V	Phase-cut	2700	2428	90	20	Diffused
8540	Text. Black - Text. White	TopLED 48W	220-240V	Phase-cut	3000	2556	90	20	Diffused
8540M	Text. Black - Text. White	TopLED 48W	220-240V	Phase-cut	2700	2428	90	20	Diffused
8541	Text. Chocolate - Text. White	TopLED 48W	220-240V	Phase-cut	3000	2556	90	20	Diffused
8541M	Text. Chocolate - Text. White	TopLED 48W	220-240V	Phase-cut	2700	2428	90	20	Diffused

Reflexio Ceiling

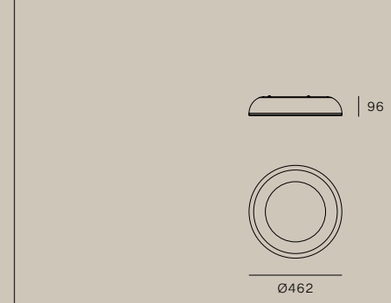

8530 **KIT0080** / CASAMBI
8530M PH-CUT / 1 art / in
8531 **KIT0026**
8531M PH-CUT / 1-2 art
8534
8534M

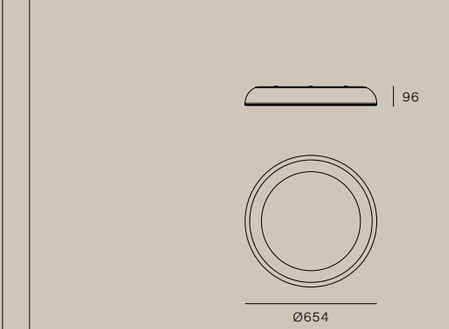

8532 **KIT0080** / CASAMBI
8532M PH-CUT / 1 art / in
8533 **KIT0026**
8533M PH-CUT / 1-2 art
8535
8535M

Reflexio, Ceiling

Code	Finish	Source	Input	Dimming	CCT (K)	Lm D	CRI	IP	Optic
8530	Textured White	TopLED 35W	220-240V	Phase-cut	3000	1380	90	40	Diffused
8530M	Textured White	TopLED 35W	220-240V	Phase-cut	2700	1311	90	40	Diffused
8531	Text. Black - Text. White	TopLED 35W	220-240V	Phase-cut	3000	1380	90	40	Diffused
8531M	Text. Black - Text. White	TopLED 35W	220-240V	Phase-cut	2700	1311	90	40	Diffused
8534	Text. Chocolate - Text. White	TopLED 35W	220-240V	Phase-cut	3000	1380	90	40	Diffused
8534M	Text. Chocolate - Text. White	TopLED 35W	220-240V	Phase-cut	2700	1311	90	40	Diffused
8532	Textured White	TopLED 48W	220-240V	Phase-cut	3000	2556	90	40	Diffused
8532M	Textured White	TopLED 48W	220-240V	Phase-cut	2700	2428	90	40	Diffused
8533	Text. Black - Text. White	TopLED 48W	220-240V	Phase-cut	3000	2556	90	40	Diffused
8533M	Text. Black - Text. White	TopLED 48W	220-240V	Phase-cut	2700	2428	90	40	Diffused
8535	Text. Chocolate - Text. White	TopLED 48W	220-240V	Phase-cut	3000	2556	90	40	Diffused
8535M	Text. Chocolate - Text. White	TopLED 48W	220-240V	Phase-cut	2700	2428	90	40	Diffused

Saliscendi **Pendant**

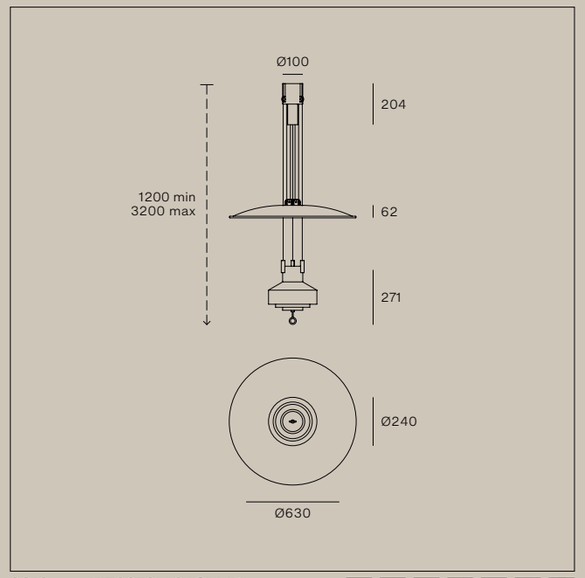

9310
9311
9312
9313
9314

KIT0079 / CASAMBI
DALI / 1 art / out

Saliscendi, Pendant

Code	Finish	Source	Input	Dimming	CCT (K)	Lm D	CRI	IP	Optic
9310	Polished Rubin	TopLED 36W	220-240V	DALI Push	2700	1428	90	20	Diffused
9311	Polished Limestone	TopLED 36W	220-240V	DALI Push	2700	1428	90	20	Diffused
9312	Polished Emerald	TopLED 36W	220-240V	DALI Push	2700	1428	90	20	Diffused
9313	Matt Black	TopLED 36W	220-240V	DALI Push	2700	1428	90	20	Diffused
9314	Matt White	TopLED 36W	220-240V	DALI Push	2700	1428	90	20	Diffused

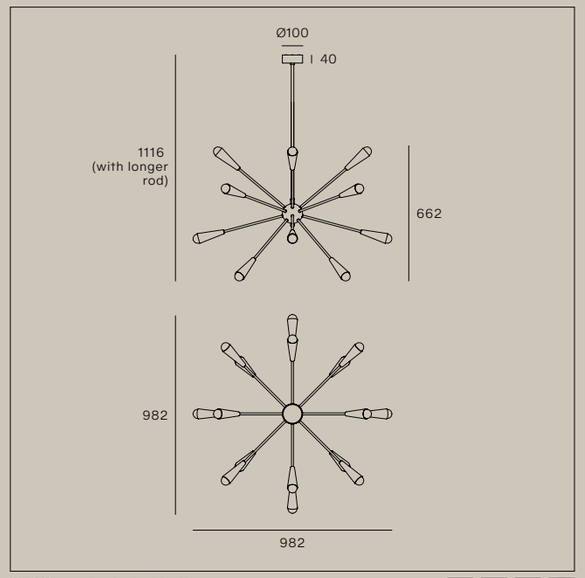

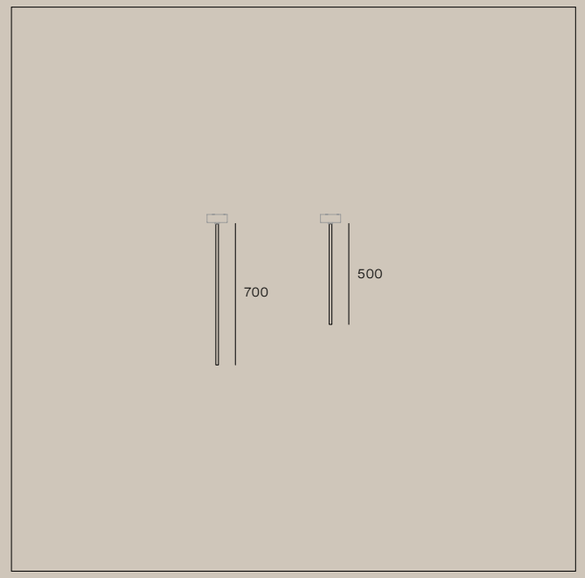

9590 **Included bulb**
9591 Miniglobo P45
9592 LED Bulb E14 6,5W

IP20

EN **2 rod sizes included**
IT **2 misure di asta incluse**
FR **2 tailles de tige incluses**
DE **2 Stabgrößen enthalten**
ES **2 tamaños de varilla incluidos**

Sputnik, Pendant

Code	Finish	Source	Input	Dimming	CCT (K)	Lm D	CRI	IP	Optic
9590	Polished Gold - Polished Black	16xE14 6,5W	220-240V	No	2700	12896	≥80	20	Diffused
9591	Polished Gold - Polished Ivory	16xE14 6,5W	220-240V	No	2700	12896	≥80	20	Diffused
9592	Polished Gold - Multicolor	16xE14 6,5W	220-240V	No	2700	12896	≥80	20	Diffused

Tablet

Pendant

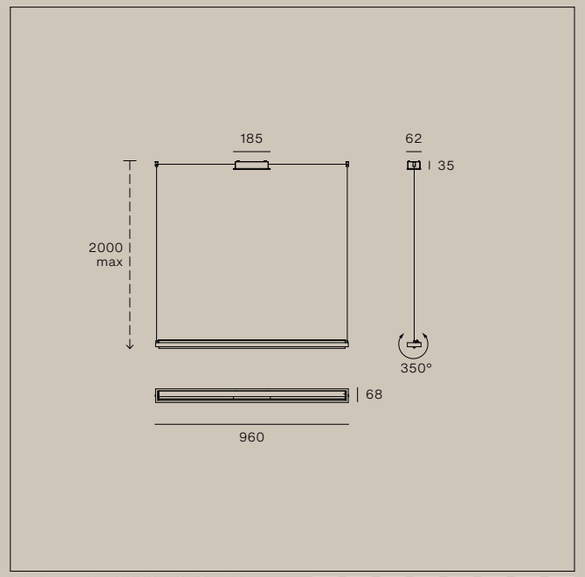

8475 **KIT0080** / CASAMBI
8476 PH-CUT / 1 art / out
KIT0026
PH-CUT / 1-4 art

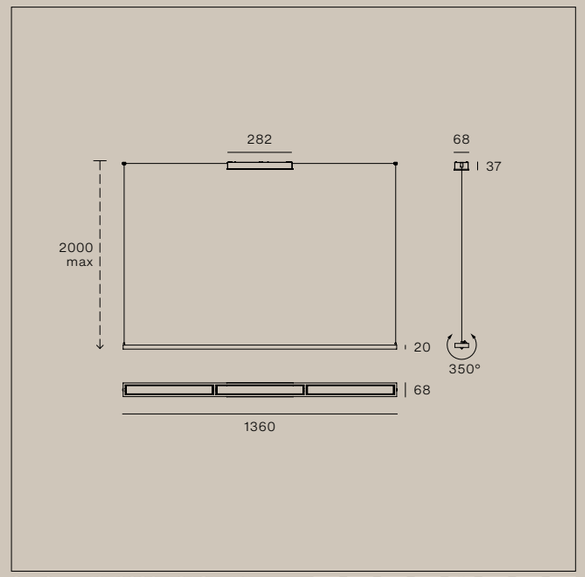

8450 **KIT0080** / CASAMBI
8451 PH-CUT / 1 art / out
KIT0026
PH-CUT / 1-2 art

Tablet, Pendant

Code	Finish	Source	Input	Dimming	CCT (K)	Lm D	CRI	IP	Optic
8475	Textured White	TopLED 23W	220-240V	Phase-cut	3000	1535	90	20	Diffused
8476	Textured Black	TopLED 23W	220-240V	Phase-cut	3000	1535	90	20	Diffused
8450	Textured White	TopLED 42W	220-240V	Phase-cut	3000	2748	90	20	Diffused
8451	Textured Black	TopLED 42W	220-240V	Phase-cut	3000	2748	90	20	Diffused

Tablet

Wall

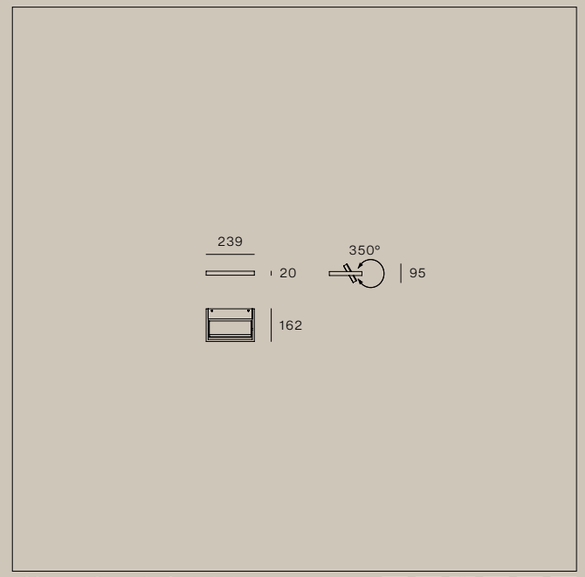

7601 **Cover for instl. hole:**
7609 **KIT81** for 7601
KIT0042 for 7609

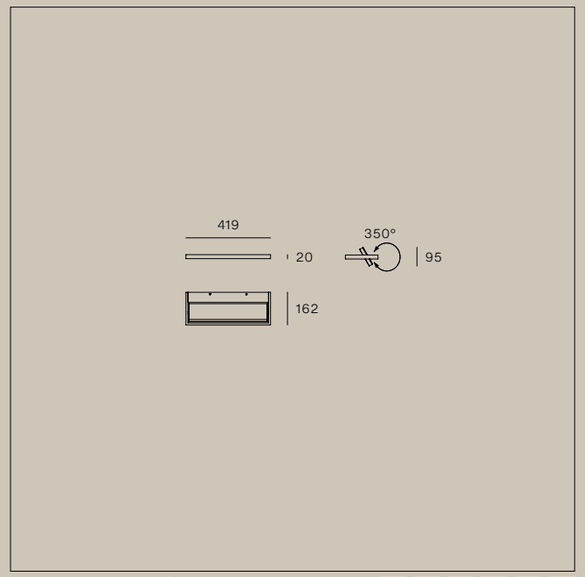

7602 **Cover for instl. hole:**
7610 **KIT82** for 7602
KIT0043 for 7610

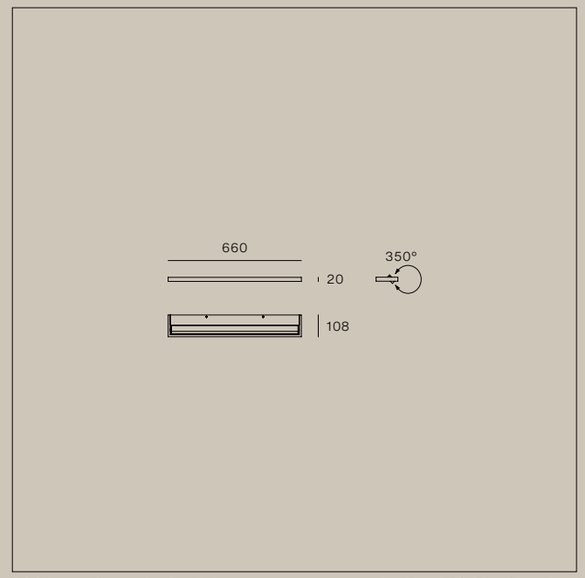

7604 **Cover for instl. hole:**
7611 **KIT83** for 7604
KIT0044 for 7611

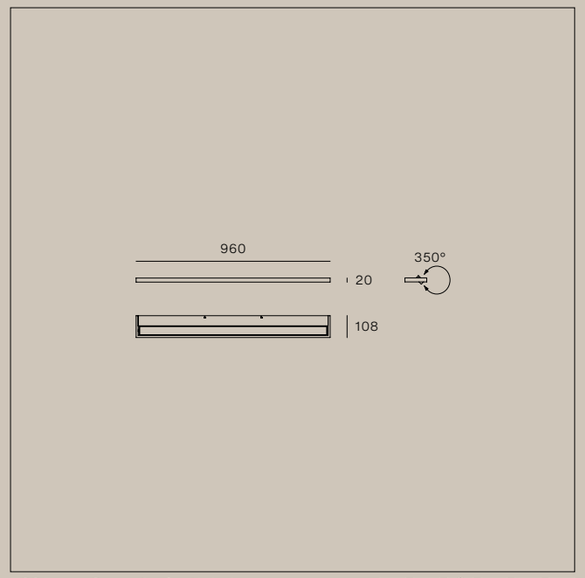

7605 **Cover for instl. hole:**
7612 **KIT84** for 7605
KIT0045 for 7612

Tablet, Wall

Code	Finish	Source	Input	Dimming	CCT (K)	Lm D	CRI	IP	Optic
7601	Textured White	TopLED 16W	220-240V	No	3000	1102	90	40	Diffused
7609	Textured Black	TopLED 16W	220-240V	No	3000	1102	90	40	Diffused
7602	Textured White	TopLED 31W	220-240V	No	3000	2197	90	40	Diffused
7610	Textured Black	TopLED 31W	220-240V	No	3000	2197	90	40	Diffused
7604	Textured White	TopLED 21W	220-240V	No	3000	1279	90	40	Diffused
7611	Textured Black	TopLED 21W	220-240V	No	3000	1279	90	40	Diffused
7605	Textured White	TopLED 32W	220-240V	No	3000	1975	90	40	Diffused
7612	Textured Black	TopLED 32W	220-240V	No	3000	1975	90	40	Diffused

Tablet Wall

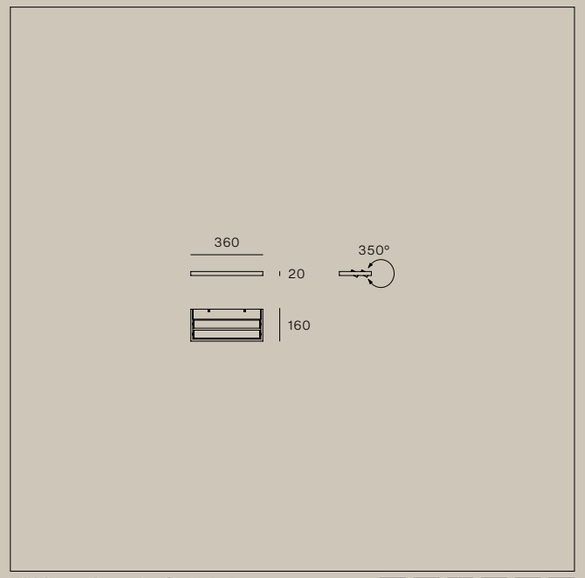

7606
7613

Cover for instl. hole:
KIT0046 for 7606
KIT0047 for 7613

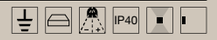

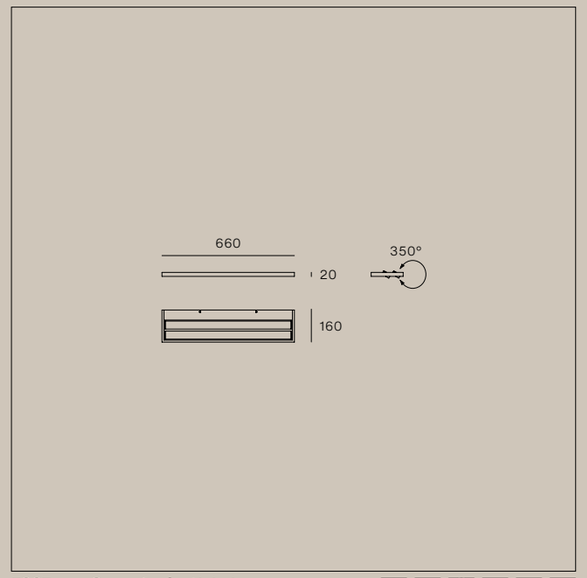

7607
7614

Cover for instl. hole:
KIT83 for 7607
KIT0044 for 7614



Tablet, Wall

Code	Finish	Source	Input	Dimming	CCT (K)	Lm D	CRI	IP	Optic
7606	Textured White	TopLED 22W	220-240V	No	3000	1437	90	40	Diffused
7613	Textured Black	TopLED 22W	220-240V	No	3000	1437	90	40	Diffused
7607	Textured White	TopLED 45W	220-240V	No	3000	2768	90	40	Diffused
7614	Textured Black	TopLED 45W	220-240V	No	3000	2768	90	40	Diffused

Tablet Floor

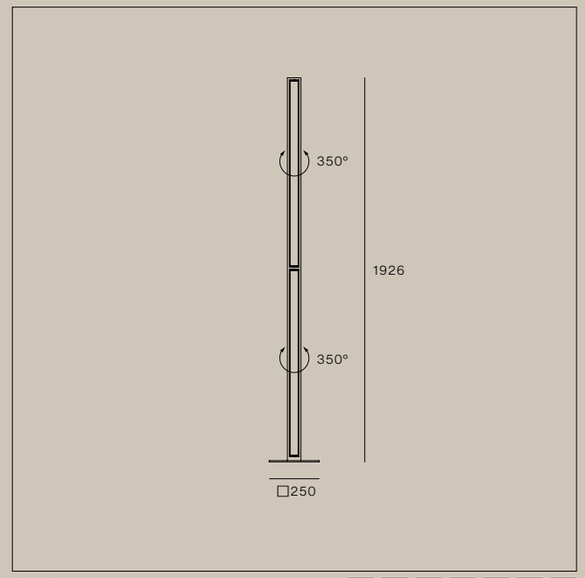

8452
8453



Tablet, Floor

Code	Finish	Source	Input	Dimming	CCT (K)	Lm D	CRI	IP	Optic
8452	Textured White	TopLED 36W	220-240V	Push DIM	3000	2402	90	20	Diffused
8453	Textured Black	TopLED 36W	220-240V	Push DIM	3000	2402	90	20	Diffused

Minitopo Table

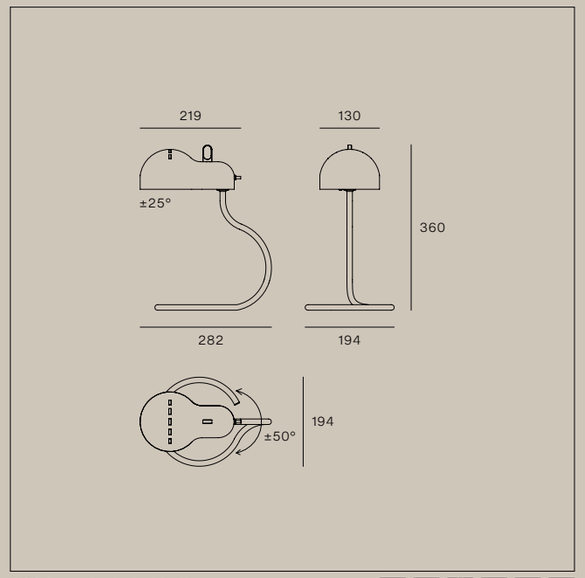

9064
9065
9066
9067
9068
9069
9070

Included bulb
Classic A Retrofit
LED Bulb E27 6W

IP20

Minitopo, Table

Code	Finish	Source	Input	Dimming	CCT (K)	Lm D	CRI	IP	Optic
9064	Polished Red Iconic	1xE27 6W	220-240V	No	2700	806	≥80	20	Diffused
9065	Polished Pure White - Chrome	1xE27 6W	220-240V	No	2700	806	≥80	20	Diffused
9066	Polished Black - Chrome	1xE27 6W	220-240V	No	2700	806	≥80	20	Diffused
9067	Polished Red - Chrome	1xE27 6W	220-240V	No	2700	806	≥80	20	Diffused
9068	Polished Mint Green - Chrome	1xE27 6W	220-240V	No	2700	806	≥80	20	Diffused
9069	Chrome	1xE27 6W	220-240V	No	2700	806	≥80	20	Diffused
9070	Polished Gold - Matt Black	1xE27 6W	220-240V	No	2700	806	≥80	20	Diffused

Topo Table

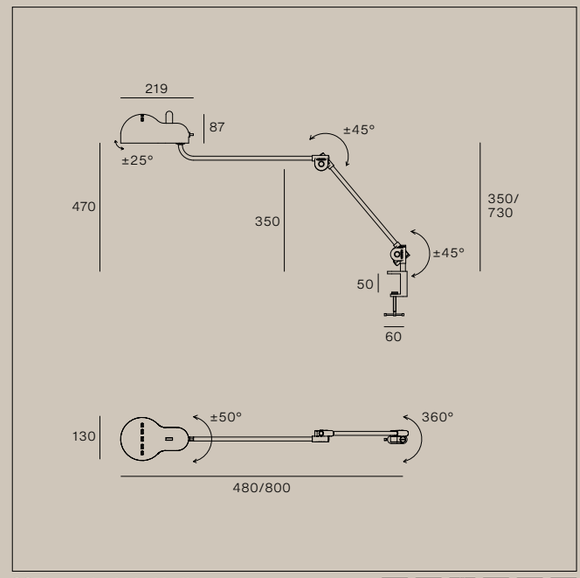

9071
9072
9073
9074
9075

Included bulb
Classic A Retrofit
LED Bulb E27 6W

IP20

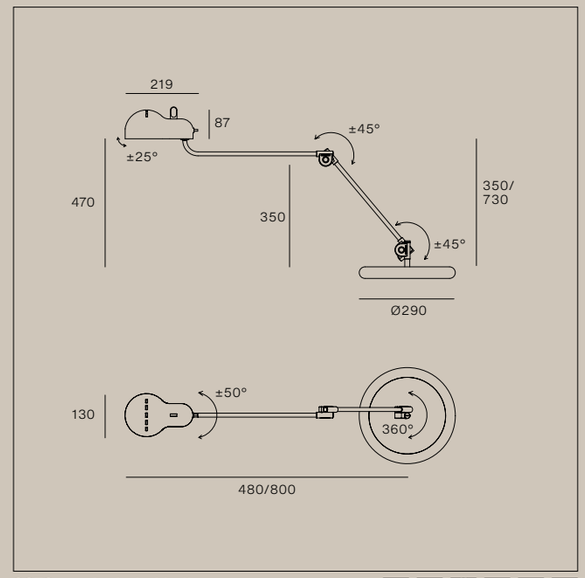

9076
9077
9078
9079
9080

Included bulb
Classic A Retrofit
LED Bulb E27 6W

IP20

Topo, Table

Code	Finish	Source	Input	Dimming	CCT (K)	Lm D	CRI	IP	Optic
9071	Polished Pure White	1xE27 6W	220-240V	No	2700	806	≥80	20	Diffused
9072	Polished Black	1xE27 6W	220-240V	No	2700	806	≥80	20	Diffused
9073	Polished Red Iconic	1xE27 6W	220-240V	No	2700	806	≥80	20	Diffused
9074	Polished Mint Green	1xE27 6W	220-240V	No	2700	806	≥80	20	Diffused
9075	Chrome	1xE27 6W	220-240V	No	2700	806	≥80	20	Diffused
9076	Polish. Pure White - Text. Black	1xE27 6W	220-240V	No	2700	806	≥80	20	Diffused
9077	Polished Black - Text. Black	1xE27 6W	220-240V	No	2700	806	≥80	20	Diffused
9078	Polished Red Iconic	1xE27 6W	220-240V	No	2700	806	≥80	20	Diffused
9079	Polish. Mint Green - Text. Black	1xE27 6W	220-240V	No	2700	806	≥80	20	Diffused
9080	Chrome - Text. Black	1xE27 6W	220-240V	No	2700	806	≥80	20	Diffused

Topo **Floor**

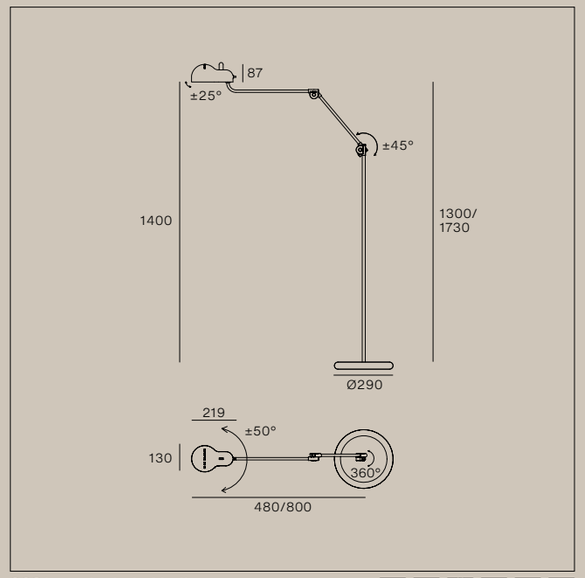

9081 **Included bulb**
9082 Classic A Retrofit
9083 LED Bulb E27 6W
9084
9085

Topo, Floor

Code	Finish	Source	Input	Dimming	CCT (K)	Lm D	CRI	IP	Optic
9081	Polish. Pure White - Text. Black	1xE27 6W	220-240V	No	2700	806	≥80	20	Diffused
9082	Polished Black - Text. Black	1xE27 6W	220-240V	No	2700	806	≥80	20	Diffused
9083	Polished Red Iconic	1xE27 6W	220-240V	No	2700	806	≥80	20	Diffused
9084	Polish. Mint Green - Text. Black	1xE27 6W	220-240V	No	2700	806	≥80	20	Diffused
9085	Chrome - Text. Black	1xE27 6W	220-240V	No	2700	806	≥80	20	Diffused

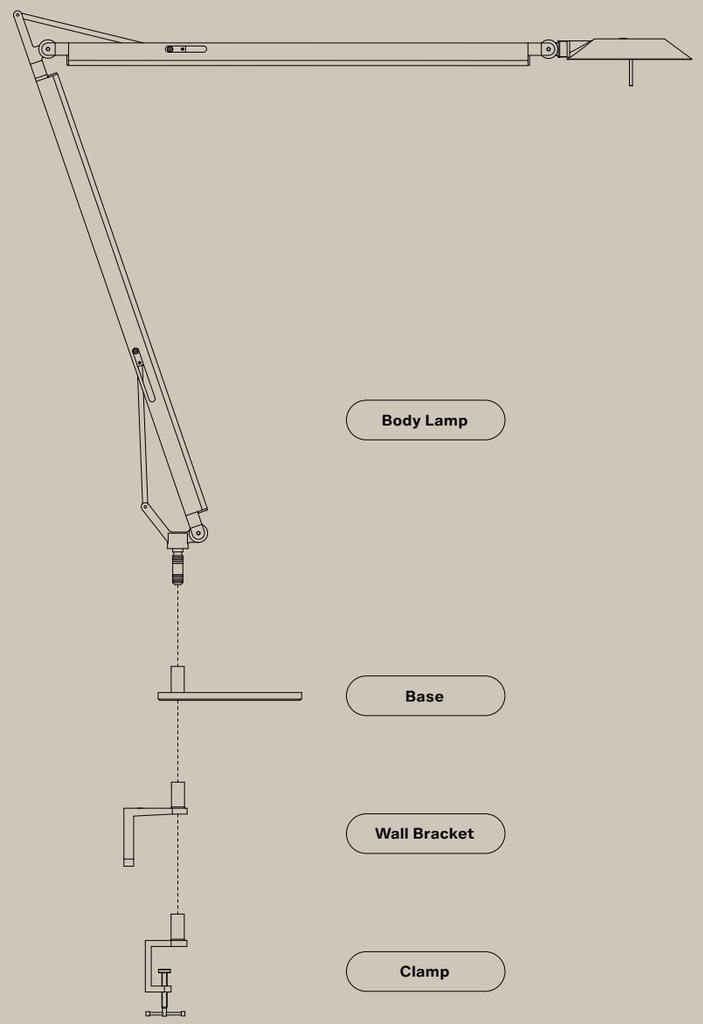

Torino, Base

Code	Finish
CZ004RWHEZZ	Textured White
CZ004RBBEZZ	Textured Black
CZ004RMGEZZ	Textured Grey
CZ004RLUEZZ	Textured Deep Blue
CZ004RGBEZZ	Textured Petrol
CZ004RBEEZZ	Textured Peach

Torino, Wall Bracket

Code	Finish
CZ006RWHEZZ	Textured White
CZ006RBBEZZ	Textured Black
CZ006RMGEZZ	Textured Grey
CZ006RLUEZZ	Textured Deep Blue
CZ006RGBEZZ	Textured Petrol
CZ006RBEEZZ	Textured Peach

Torino, Clamp

Code	Finish
CZ005RWHEZZ	Textured White
CZ005RBBEZZ	Textured Black
CZ005RMGEZZ	Textured Grey
CZ005RLUEZZ	Textured Deep Blue
CZ005RGBEZZ	Textured Petrol
CZ005RBEEZZ	Textured Peach

Torino, Body Lamp

Code	Finish	Source	Input	Dimming	CCT (K)	Lm D	CRI	IP	Optic
CZ003IWHWDI	Textured White	TopLED 8W	220-240V	Touch	3000	796	90	20	Diffused
CZ003IWHMDI	Textured White	TopLED 8W	220-240V	Touch	2700	744	90	20	Diffused
CZ003IBBWDI	Textured Black	TopLED 8W	220-240V	Touch	3000	796	90	20	Diffused
CZ003IBBMDI	Textured Black	TopLED 8W	220-240V	Touch	2700	744	90	20	Diffused
CZ003IMGWDI	Textured Grey	TopLED 8W	220-240V	Touch	3000	796	90	20	Diffused
CZ003IMGMDI	Textured Grey	TopLED 8W	220-240V	Touch	2700	744	90	20	Diffused
CZ003ILUWDI	Textured Deep Blue	TopLED 8W	220-240V	Touch	3000	796	90	20	Diffused
CZ003ILUMDI	Textured Deep Blue	TopLED 8W	220-240V	Touch	2700	744	90	20	Diffused
CZ003IGBWDI	Textured Petrol	TopLED 8W	220-240V	Touch	3000	796	90	20	Diffused
CZ003IGBMDI	Textured Petrol	TopLED 8W	220-240V	Touch	2700	744	90	20	Diffused
CZ003IBEWDI	Textured Peach	TopLED 8W	220-240V	Touch	3000	796	90	20	Diffused
CZ003IBEMDI	Textured Peach	TopLED 8W	220-240V	Touch	2700	744	90	20	Diffused

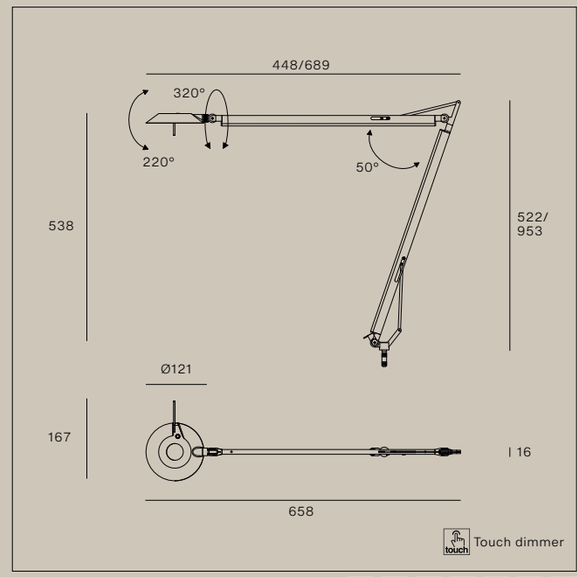

CZ003IWHWDI
CZ003IWHMDI
CZ003IBBWDI
CZ003IBBMDI
CZ003IMGWDI
CZ003IMGMDI
CZ003ILUWDI
CZ003ILUMDI
CZ003IGBWDI
CZ003IGBMDI
CZ003IBEWDI
CZ003IBEMDI

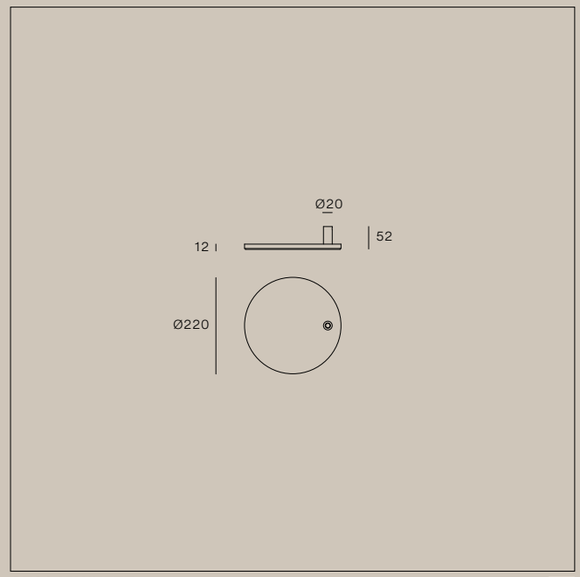

CZ004RWHEZZ
CZ004RBBEZZ
CZ004RMGEZZ
CZ004RLUEZZ
CZ004RGBEZZ
CZ004RBEEZZ

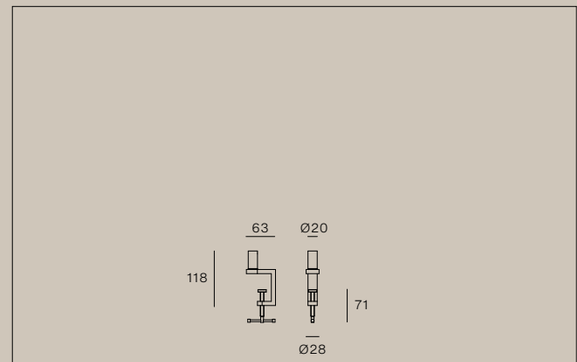

CZ005RWHEZZ
CZ005RBBEZZ
CZ005RMGEZZ
CZ005RLUEZZ
CZ005RGBEZZ
CZ005RBEEZZ

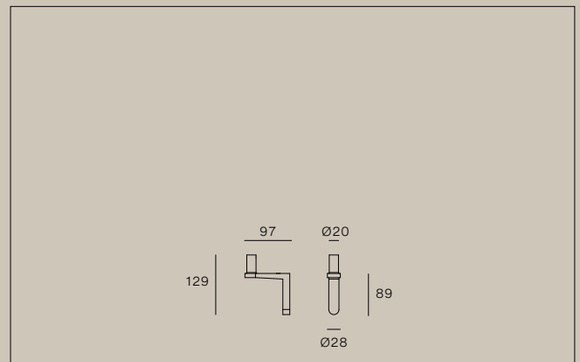

CZ006RWHEZZ
CZ006RBBEZZ
CZ006RMGEZZ
CZ006RLUEZZ
CZ006RGBEZZ
CZ006RBEEZZ

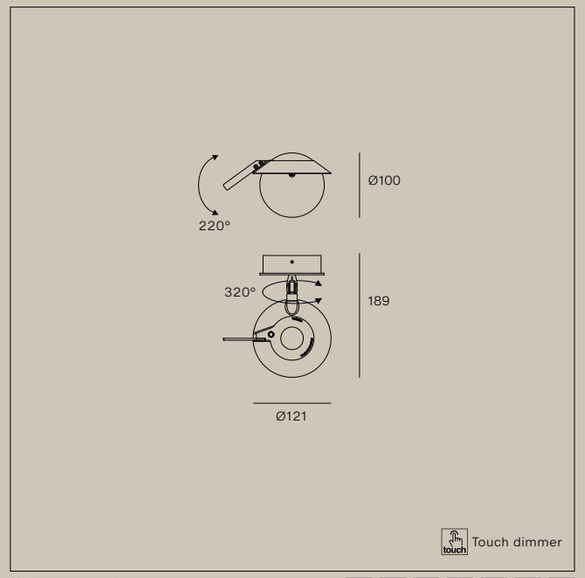

CZ151IWHWDI
CZ151IWHMDI
CZ151IBBWDI
CZ151IBBMDI
CZ151IMGWDI
CZ151IMGMDI
CZ151ILUWDI
CZ151ILUMDI
CZ151IGBWDI
CZ151IGBMDI
CZ151IBEWDI
CZ151IBEMDI

touch IP20

Torino, Wall/Ceiling

Code	Finish	Source	Input	Dimming	CCT (K)	Lm D	CRI	IP	Optic
CZ151IWHWDI	Textured White	TopLED 8W	220-240V	Touch	3000	796	90	20	Diffused
CZ151IWHMDI	Textured White	TopLED 8W	220-240V	Touch	2700	744	90	20	Diffused
CZ151IBBWDI	Textured Black	TopLED 8W	220-240V	Touch	3000	796	90	20	Diffused
CZ151IBBMDI	Textured Black	TopLED 8W	220-240V	Touch	2700	744	90	20	Diffused
CZ151IMGWDI	Textured Grey	TopLED 8W	220-240V	Touch	3000	796	90	20	Diffused
CZ151IMGMDI	Textured Grey	TopLED 8W	220-240V	Touch	2700	744	90	20	Diffused
CZ151ILUWDI	Textured Deep Blue	TopLED 8W	220-240V	Touch	3000	796	90	20	Diffused
CZ151ILUMDI	Textured Deep Blue	TopLED 8W	220-240V	Touch	2700	744	90	20	Diffused
CZ151IGBWDI	Textured Petrol	TopLED 8W	220-240V	Touch	3000	796	90	20	Diffused
CZ151IGBMDI	Textured Petrol	TopLED 8W	220-240V	Touch	2700	744	90	20	Diffused
CZ151IBEWDI	Textured Peach	TopLED 8W	220-240V	Touch	3000	796	90	20	Diffused
CZ151IBEMDI	Textured Peach	TopLED 8W	220-240V	Touch	2700	744	90	20	Diffused

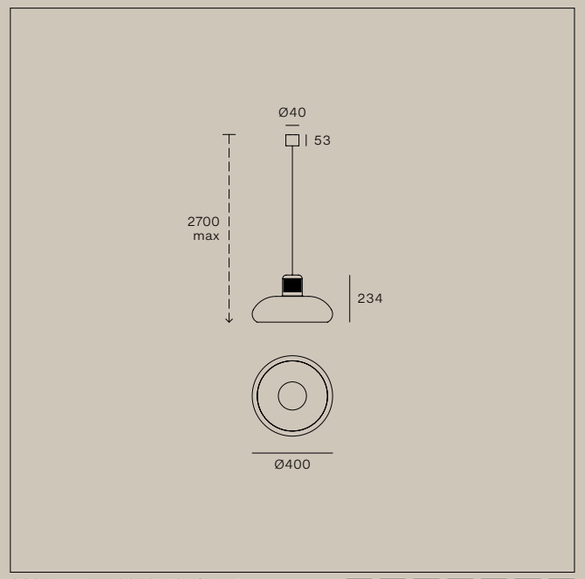

9305
9305M
9306
9306M
9307
9307M
9308
9308M

KIT0079 / CASAMBI
DALI / 1 art / out

Trepiù, Pendant

Code	Finish	Source	Input	Dimming	CCT (K)	Lm D	CRI	IP	Optic
9305	Chrome - Polished Black	TopLED 27W	220-240V	DALI Push	3000	1525	90	20	Diffused
9305M	Chrome - Polished Black	TopLED 27W	220-240V	DALI Push	2700	1448	90	20	Diffused
9306	Chrome - Polished Signal Yellow	TopLED 27W	220-240V	DALI Push	3000	1525	90	20	Diffused
9306M	Chrome - Polished Signal Yellow	TopLED 27W	220-240V	DALI Push	2700	1448	90	20	Diffused
9307	Polish. Pure White - Polish. Black	TopLED 27W	220-240V	DALI Push	3000	1525	90	20	Diffused
9307M	Polish. Pure White - Polish. Black	TopLED 27W	220-240V	DALI Push	2700	1448	90	20	Diffused
9308	Polish. Pure White - Polish. Signal Yellow	TopLED 27W	220-240V	DALI Push	3000	1525	90	20	Diffused
9308M	Polish. Pure White - Polish. Signal Yellow	TopLED 27W	220-240V	DALI Push	2700	1448	90	20	Diffused

Triedro **Pendant**

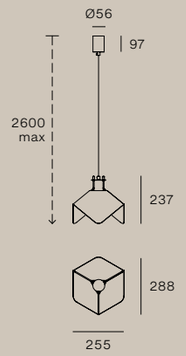

8995 **Included bulb**
Classic A Mirror
LED Bulb E27 6,5W

Triedro, Pendant

Code	Finish	Source	Input	Dimming	CCT (K)	Lm D	CRI	IP	Optic
8995	Matt Black - Polish. Pure White	1xE27 6,5W	220-240V	No	2700	650	≥80	20	Diffused

Triedro **Wall**

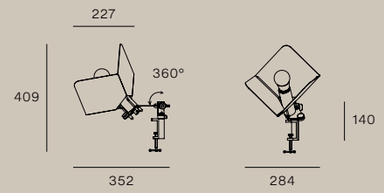

8992 **Included bulb**
Classic A Mirror
LED Bulb E27 6,5W

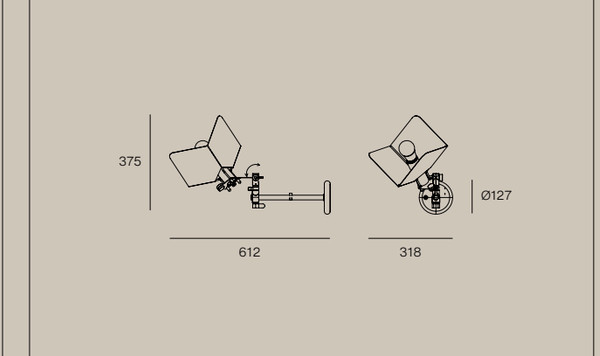

8993 **Included bulb**
Classic A Mirror
LED Bulb E27 6,5W

Triedro, Wall

Code	Finish	Source	Input	Dimming	CCT (K)	Lm D	CRI	IP	Optic
8992	Matt Black - Polish. Pure White	1xE27 6,5W	220-240V	No	2700	650	≥80	20	Diffused
8993	Matt Black - Polish. Pure White	1xE27 6,5W	220-240V	No	2700	650	≥80	20	Diffused

Triedro **Floor**

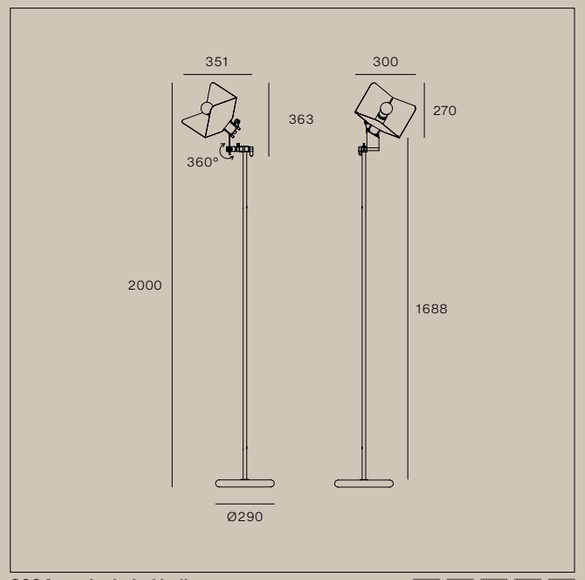

8994 **Included bulb**
Classic A Mirror
LED Bulb E27 6,5W

IP20

Triedro, Floor

Code	Finish	Source	Input	Dimming	CCT (K)	Lm D	CRI	IP	Optic
8994	Matt Black - Polish. Pure White	1xE27 6,5W	220-240V	No	2700	650	≥80	20	Diffused

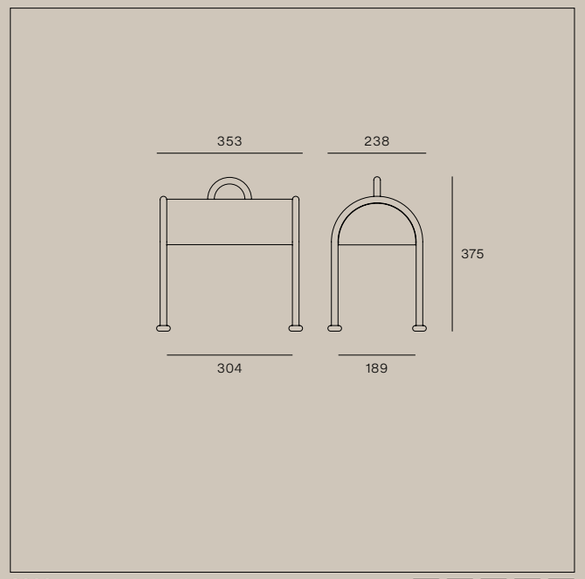

8960 **Included bulb**
Classic A Retrofit
LED Bulb E27 6W

IP20

Valigia, Table

Code	Finish	Source	Input	Dimming	CCT (K)	Lm D	CRI	IP	Optic
8960	Polished Red - Matt Black	1xE27 6W	220-240V	No	2700	806	80	20	Diffused

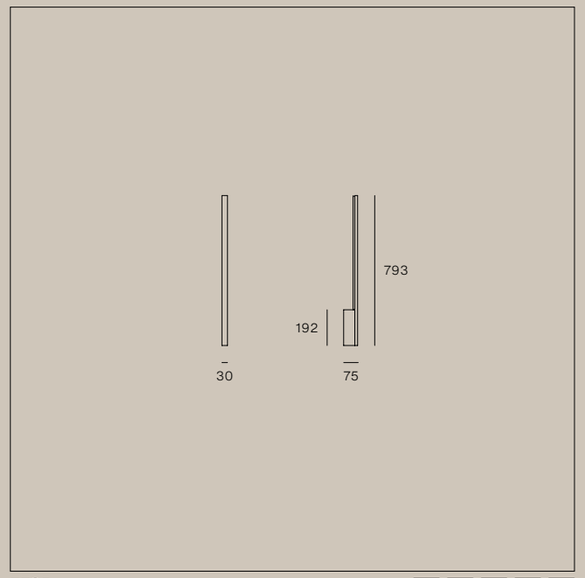

7765
7766

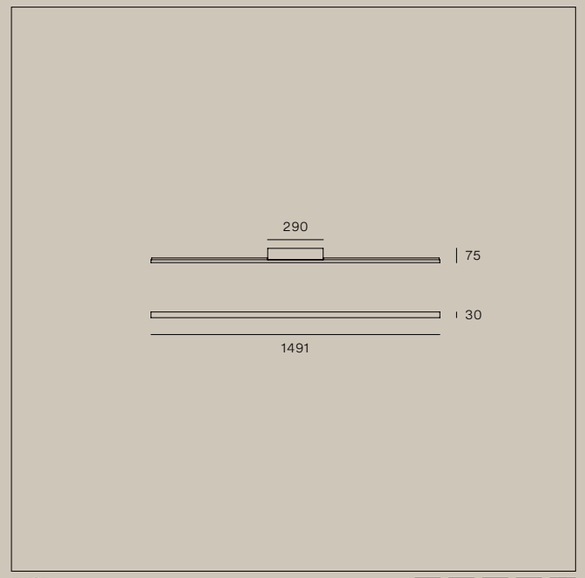

7767
7768

Xilema, Wall

Code	Finish	Source	Input	Dimming	CCT (K)	Lm D	CRI	IP	Optic
7765	Textured White	TopLED 17W	220-240V	No	3000	1079	90	20	Double asym.
7766	Polished Aluminium	TopLED 17W	220-240V	No	3000	1079	90	20	Double asym.
7767	Textured White	TopLED 34W	220-240V	No	3000	1914	90	20	Double asym.
7768	Polished Aluminium	TopLED 34W	220-240V	No	3000	1914	90	20	Double asym.

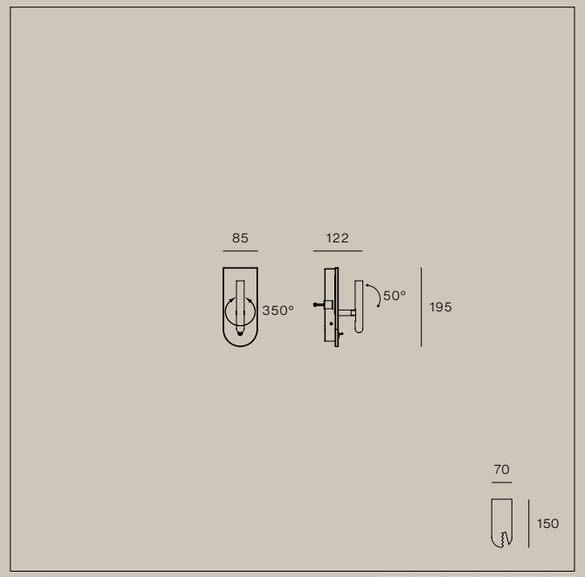

8636
8637
8639
8638

IP20

1Night, Wall

Code	Finish	Source	Input	Dimming	CCT (K)	Lm D	CRI	IP	Optic
8636	Textured White	TopLED 4W	220-240V	No	3000	157	90	20	Wide Flood
8637	Textured Black	TopLED 4W	220-240V	No	3000	157	90	20	Wide Flood
8639	Text. White - Polished Copper	TopLED 4W	220-240V	No	3000	157	90	20	Wide Flood
8638	Text. Black - Polished Gold	TopLED 4W	220-240V	No	3000	157	90	20	Wide Flood

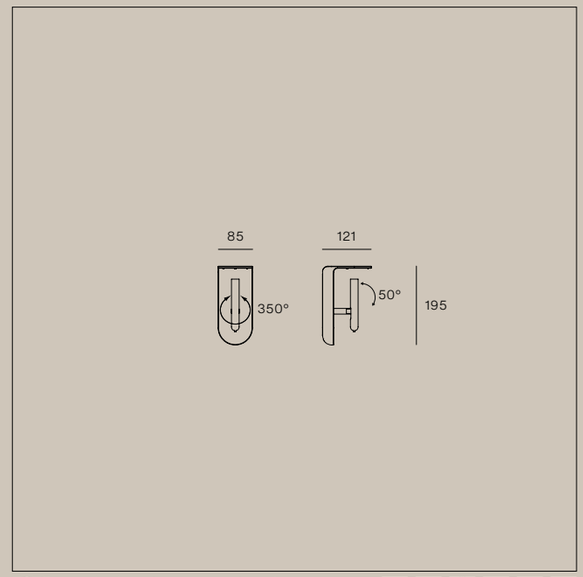

7975
7977
7942
7944

Amber, transparent and opal filters included

IP20

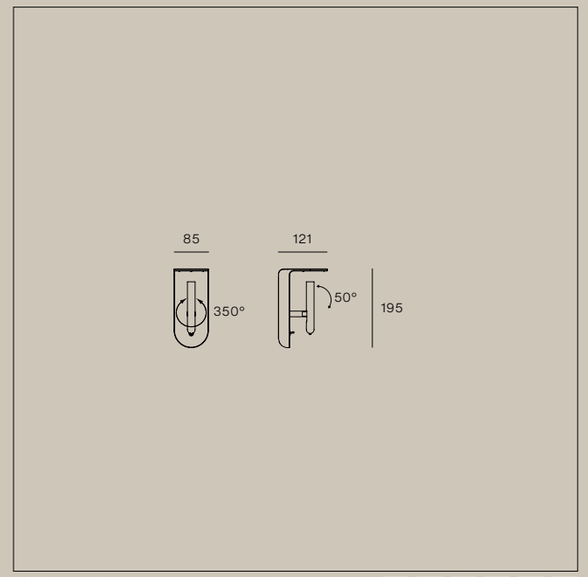

7976
7978
7943
7945

Amber, transparent and opal filters included

IP20

Coloured , transparent and opal filters

Filters included

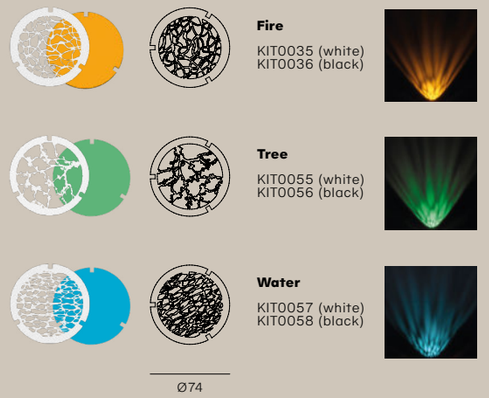

2Nights optional filters

2Night, Wall

Code	Finish	Source	Input	Dimming	CCT (K)	Lm D	CRI	IP	Optic
7975	Textured White	TopLED 4W	220-240V	No	3000	157	90	20	Wide Flood
7977	Textured Black	TopLED 4W	220-240V	No	3000	157	90	20	Wide Flood
7942	Text. White - Polished Copper	TopLED 4W	220-240V	No	3000	157	90	20	Wide Flood
7944	Text. Black - Polished Gold	TopLED 4W	220-240V	No	3000	157	90	20	Wide Flood
7976	Textured White	TopLED 4W	220-240V	No	3000	157	90	20	Wide Flood
7978	Textured Black	TopLED 4W	220-240V	No	3000	157	90	20	Wide Flood
7943	Text. White - Polished Copper	TopLED 4W	220-240V	No	3000	157	90	20	Wide Flood
7945	Text. Black - Polished Gold	TopLED 4W	220-240V	No	3000	157	90	20	Wide Flood

Code Index

CODE	PRODUCT	PP
7601	Tablet	433
7602	Tablet	433
7604	Tablet	433
7605	Tablet	433
7606	Tablet	434
7607	Tablet	434
7609	Tablet	433
7610	Tablet	433
7611	Tablet	433
7612	Tablet	433
7613	Tablet	434
7614	Tablet	434
7750	Quad	424
7750M	Quad	424
7753	Quad	424
7753M	Quad	424
7765	Xilema	452
7766	Xilema	452
7767	Xilema	452
7768	Xilema	452
7785	Dynamic	350
7785M	Dynamic	350
7786	Dynamic	350
7786M	Dynamic	350
7787	Dynamic	350
7787M	Dynamic	350
7788	Mr Magoo	401
7788M	Mr Magoo	401
7789	Mr Magoo	403
7789M	Mr Magoo	403
7942	2Nights	455
7943	2Nights	455
7944	2Nights	455
7945	2Nights	455
7975	2Nights	455
7976	2Nights	455
7977	2Nights	455
7978	2Nights	455

CODE	PRODUCT	PP
8005	Mr Magoo	400
8005M	Mr Magoo	400
8006	Mr Magoo	402
8006M	Mr Magoo	402
8007	Mr Magoo	400
8007M	Mr Magoo	400
8008	Mr Magoo	402
8008M	Mr Magoo	402
8009	Mr Magoo	404
8009M	Mr Magoo	404
8037	Opti-Line	410
8038	Opti-Line	410
8089	Oxygen	412
8090	Oxygen	412
8093	Oxygen	412
8094	Oxygen	412
8097	Oxygen	414
8098	Oxygen	414
8101	Oxygen	414
8102	Oxygen	414
8135	Mr Magoo	400
8135M	Mr Magoo	400
8136	Mr Magoo	402
8136M	Mr Magoo	402
8137	Mr Magoo	400
8137M	Mr Magoo	400
8138	Mr Magoo	402
8138M	Mr Magoo	402
8163	Diphy	348
8163M	Diphy	348
8164	Diphy	348
8164M	Diphy	348
8165	Diphy	349
8165M	Diphy	349
8166	Diphy	348
8166M	Diphy	348
8167	Diphy	348
8167M	Diphy	348

CODE	PRODUCT	PP
8168	Diphy	347
8168M	Diphy	347
8169	Diphy	347
8169M	Diphy	347
8170	Diphy	347
8170M	Diphy	347
8171	Diphy	347
8171M	Diphy	347
8172	Diphy	347
8172M	Diphy	347
8173	Diphy	347
8173M	Diphy	347
8174	Diphy	347
8174M	Diphy	347
8185	Oxygen	413
8186	Oxygen	413
8450	Tablet	432
8451	Tablet	432
8452	Tablet	435
8453	Tablet	435
8475	Tablet	432
8476	Tablet	432
8490	Opti-Line	410
8491	Opti-Line	410
8495	Oxygen	413
8496	Oxygen	413
8530	Reflexio	427
8530M	Reflexio	427
8531	Reflexio	427
8531M	Reflexio	427
8532	Reflexio	427
8532M	Reflexio	427
8533	Reflexio	427
8533M	Reflexio	427
8534	Reflexio	427
8534M	Reflexio	427
8535	Reflexio	427
8535M	Reflexio	427

CODE	PRODUCT	PP
8536	Reflexio	426
8536M	Reflexio	426
8537	Reflexio	426
8537M	Reflexio	426
8538	Reflexio	426
8538M	Reflexio	426
8539	Reflexio	426
8539M	Reflexio	426
8540	Reflexio	426
8540M	Reflexio	426
8541	Reflexio	426
8541M	Reflexio	426
8624	La Mariée	384
8625	La Mariée	384
8626	La Mariée	384
8627	La Mariée	384
8628	La Mariée	385
8629	La Mariée	385
8630	La Mariée	385
8631	La Mariée	385
8636	1Night	454
8637	1Night	454
8638	1Night	454
8639	1Night	454
8680	Honey	375
8682	Honey	375
8684	Honey	375
8685	Honey	375
8686	Honey	375
8687	Honey	375
8688	Honey	376
8689	Honey	375
8690	Honey	376
8691	Honey	375
8890	Demì	342
8890M	Demì	342
8891	Demì	342
8891M	Demì	342

Code Index

CODE	PRODUCT	PP
8892	Demì	342
8892M	Demì	342
8893	Demì	343
8893M	Demì	343
8894	Demì	343
8894M	Demì	343
8895	Demì	343
8895M	Demì	343
8960	Valigia	450
8961	Buonanotte	334
8962	Buonanotte	334
8963	Buonanotte	334
8964	Buonanotte	334
8966	Fante	353
8967	Fante	352
8968	Fante	353
8969	Fante	352
8971	Lampiatta	387
8972	Lampiatta	387
8973	Lampiatta	387
8981	Lampiatta	386
8982	Lampiatta	386
8983	Lampiatta	386
8984	Lampiatta	386
8985	Lampiatta	386
8987	Lampiatta	386
8988	Lampiatta	386
8989	Lampiatta	386
8990	Lampiatta	386
8991	Lampiatta	386
8992	Triedro	447
8993	Triedro	447
8994	Triedro	448
8995	Triedro	446
9055	Periscopio	422
9056	Periscopio	422
9057	Periscopio	422
9058	Periscopio	423

CODE	PRODUCT	PP
9059	Periscopio	423
9060	Periscopio	423
9061	Periscopio	423
9062	Periscopio	423
9063	Periscopio	423
9064	Minitopo	436
9065	Minitopo	436
9066	Minitopo	436
9067	Minitopo	436
9068	Minitopo	436
9069	Minitopo	436
9070	Minitopo	436
9071	Topo	437
9072	Topo	437
9073	Topo	437
9074	Topo	437
9075	Topo	437
9076	Topo	437
9077	Topo	437
9078	Topo	437
9079	Topo	437
9080	Topo	437
9081	Topo	438
9082	Topo	438
9083	Topo	438
9084	Topo	438
9085	Topo	438
9090	Diphy	347
9090M	Diphy	347
9275	Minibox	396
9275M	Minibox	396
9276	Minibox	396
9276M	Minibox	396
9277	Minibox	396
9277M	Minibox	396
9278	Minibox	396
9278M	Minibox	396
9279	Minibox	396

CODE	PRODUCT	PP
9279M	Minibox	396
9285	Minibox	397
9285M	Minibox	397
9286	Minibox	397
9286M	Minibox	397
9287	Minibox	397
9287M	Minibox	397
9288	Minibox	397
9288M	Minibox	397
9289	Minibox	397
9289M	Minibox	397
9300	Campana	336
9301	Campana	336
9302	Campana	336
9305	Trepiù	444
9305M	Trepiù	444
9306	Trepiù	444
9306M	Trepiù	444
9307	Trepiù	444
9307M	Trepiù	444
9308	Trepiù	444
9308M	Trepiù	444
9310	Saliscendi	428
9311	Saliscendi	428
9312	Saliscendi	428
9313	Saliscendi	428
9314	Saliscendi	428
9555	Galassia	358
9556	Galassia	358
9557	Galassia	359
9558	Galassia	359
9559	Galassia	359
9560	Galassia	360
9566	Megafono	390
9567	Megafono	390
9568	Megafono	390
9569	Megafono	390
9570	Megafono	391

CODE	PRODUCT	PP
9571	Megafono	391
9572	Megafono	391
9573	Megafono	391
9574	Megafono	392
9575	Megafono	392
9576	Megafono	390
9577	Megafono	390
9585	Gravita	368
9586	Halley	372
9586M	Halley	372
9587	Halley	372
9587M	Halley	372
9590	Sputnik	430
9591	Sputnik	430
9592	Sputnik	430
9680	Bugia	333
9681	Bugia	333
9682	Bugia	333
9683	Bugia	333
9684	Bugia	333
9686	Bugia	332
9687	Bugia	332
9688	Bugia	332
9689	Bugia	332
9690	Bugia	332
9692	Bugia	332
9693	Bugia	332
9694	Bugia	332
9695	Bugia	332
9696	Bugia	332
9698	Meta	394
9699	Meta	394
9700	Meta	394
9701	Meta	394
9702	Meta	394
9703	Luna	388
9703M	Luna	388
9705	Luna	388

Code Index

CODE	PRODUCT	PP
9705M	Luna	388
9707	Luna	389
9707M	Luna	389
9709	Luna	389
9709M	Luna	389
9711	Gravitino 541	371
9711M	Gravitino 541	371
9712	Gravitino 541	371
9712M	Gravitino 541	371
9713	Gravitino 541	371
9713M	Gravitino 541	371
9714	Gravitino 541	371
9714M	Gravitino 541	371
9715	Gravitino 541	371
9715M	Gravitino 541	371
9716	Gravitino 541	371
9716M	Gravitino 541	371
9717	Gravitino 541	370
9717M	Gravitino 541	370
9718	Gravitino 541	370
9718M	Gravitino 541	370
9719	Gravitino 541	370
9719M	Gravitino 541	370
9720	Gravitino 541	370
9720M	Gravitino 541	370
9721	Gravitino 541	370
9721M	Gravitino 541	370
9722	Gravitino 541	370
9722M	Gravitino 541	370
9733	Goletta	362
9734	Goletta	362
9735	Goletta	362
9736	Goletta	362
9737	Goletta	362
9738	Goletta	362
9775	Demì Moon	344
9775M	Demì Moon	344
9776	Demì Moon	344
9776M	Demì Moon	344
9780	Inbilico	378
9780M	Inbilico	378
9781	Inbilico	378
9781M	Inbilico	378
9782	Inbilico	378
9782M	Inbilico	378
9783	Inbilico	378
9783M	Inbilico	378
C-F300058	Cono	338
C-F300059	Cono	338
C-F300060	Cono	338
C-F300061	Cono	338
C-F300062	Cono	338
C-F300063	Cono	338
C-F300064	Cono	338
C-F300065	Cono	338
C-F300077	Cono	338
CZ001CHZMDD	Bascula	330
CZ001CHZWDD	Bascula	330
CZ001CKGMDD	Bascula	330
CZ001CKGWDD	Bascula	330
CZ001CKWMDD	Bascula	330
CZ001CKWWDD	Bascula	330
CZ001CRHMDD	Bascula	330
CZ001CRHWDD	Bascula	330
CZ003IBBMDI	Torino	440
CZ003IBBWDI	Torino	440
CZ003IBEMDI	Torino	440
CZ003IBEWDI	Torino	440
CZ003IGBMDI	Torino	440
CZ003IGBWDI	Torino	440
CZ003ILUMDI	Torino	440
CZ003ILUWDI	Torino	440
CZ003IMGMDI	Torino	440
CZ003IMGWDI	Torino	440
CZ003IWHMDI	Torino	440
CZ003IWHWDI	Torino	440
CZ004RBBEZZ	Torino	440
CZ004RBEEZZ	Torino	440
CZ004RGBEZZ	Torino	440
CZ004RLUEZZ	Torino	440
CZ004RMGEZZ	Torino	440
CZ004RWHEZZ	Torino	440
CZ005RBBEZZ	Torino	440
CZ005RBEEZZ	Torino	440
CZ005RGBEZZ	Torino	440
CZ005RLUEZZ	Torino	440
CZ005RMGEZZ	Torino	440
CZ005RWHEZZ	Torino	440
CZ006RBBEZZ	Torino	440
CZ006RBEEZZ	Torino	440
CZ006RGBEZZ	Torino	440
CZ006RLUEZZ	Torino	440
CZ006RMGEZZ	Torino	440
CZ006RWHEZZ	Torino	440
CZ009DLKMDI	Nido	408
CZ009DMUMDI	Nido	408
CZ009DWTMDI	Nido	408
CZ010DLKMDI	Nido	406
CZ010DMUMDI	Nido	406
CZ010DWTMDI	Nido	406
CZ011DLKMDI	Nido	406
CZ011DMUMDI	Nido	406
CZ011DWTMDI	Nido	406
CZ012DLKMDI	Nido	407
CZ012DMUMDI	Nido	407
CZ012DWTMDI	Nido	407
CZ013ILKMDI	Nido	409
CZ013IMUMDI	Nido	409
CZ013IWTMDI	Nido	409
CZ021CMSMDI	Papylia	416
CZ021CPZMDI	Papylia	416
CZ021CWDMDI	Papylia	416
CZ022CMSMDI	Papylia	416
CZ022CPZMDI	Papylia	416
CZ022CWDMDI	Papylia	416
CZ023CMSMDI	Papylia	418
CZ023CPZMDI	Papylia	418
CZ023CWDMDI	Papylia	418
CZ024FMSMDI	Papylia	420
CZ024FPZMDI	Papylia	420
CZ024FWDMDI	Papylia	420
CZ025IMSMDI	Papylia	419
CZ025IPZMDI	Papylia	419
CZ025IWDMDI	Papylia	419
CZ026CMSMDI	Papylia	417
CZ026CPZMDI	Papylia	417
CZ026CWDMDI	Papylia	417
CZ027FMSMDI	Papylia	420
CZ027FPZMDI	Papylia	420
CZ027FWDMDI	Papylia	420
CZ028ILKMDI	Nido	409
CZ028IMUMDI	Nido	409
CZ028IWTMDI	Nido	409
CZ030DBCMDI	Mongolfier	398
CZ030DPQMDI	Mongolfier	398
CZ030DPWMDI	Mongolfier	398
CZ030DCPMDI	Mongolfier	398
CZ030DUSMDI	Mongolfier	398
CZ031DBCMDI	Mongolfier	398
CZ031DPQMDI	Mongolfier	398
CZ031DPWMDI	Mongolfier	398
CZ031DCPMDI	Mongolfier	398
CZ031DUSMDI	Mongolfier	398
CZ032DBCMDI	Mongolfier	399
CZ032DPQMDI	Mongolfier	399
CZ032DPWMDI	Mongolfier	399
CZ032DCPMDI	Mongolfier	399
CZ032DUSMDI	Mongolfier	399
CZ033CMSMDI	Papylia	417
CZ033CPZMDI	Papylia	417
CZ033CWDMDI	Papylia	417
CZ037DBBMDI	Kimia	382
CZ037DBVMDI	Kimia	382
CZ037DWHMDI	Kimia	382
CZ038DBBMDI	Kimia	381
CZ038DBVMDI	Kimia	381
CZ038DWHMDI	Kimia	381
CZ039DBBMDI	Kimia	380
CZ039DBVMDI	Kimia	380
CZ039DWHMDI	Kimia	380
CZ041CBBMDI	Fronda	356
CZ041CBBMDW	Fronda	356
CZ041CMTMDI	Fronda	356
CZ041CMTMDW	Fronda	356
CZ041CWHMDI	Fronda	356
CZ041CWHMDW	Fronda	356
CZ042CBBMDI	Fronda	357
CZ042CBBMDW	Fronda	357
CZ042CMTMDI	Fronda	357
CZ042CMTMDW	Fronda	357
CZ042CWHMDI	Fronda	357
CZ042CWHMDW	Fronda	357
CZ043FBBMDI	Kimia	383
CZ043FBVMDI	Kimia	383
CZ043FWHMDI	Kimia	383
CZ045CWHMDI	Demì	342
CZ045CWHWDI	Demì	342
CZ045DWHMDI	Demì	342
CZ045DWHWDI	Demì	342
CZ142DVBMDI	Cono	341
CZ142DVDMDI	Cono	341
CZ142DWWMDI	Cono	341
CZ146DVBMDI	Cono	338
CZ146DVDMDI	Cono	338
CZ146DWWMDI	Cono	338
CZ148DVBMDI	Cono	340
CZ148DVDMDI	Cono	340
CZ148DWWMDI	Cono	340
CZ149DVBMDI	Cono	340
CZ149DVDMDI	Cono	340
CZ149DWWMDI	Cono	340
CZ150DVBMDI	Cono	339
CZ150DVDMDI	Cono	339
CZ150DWWMDI	Cono	339
CZ151IWHMDI	Torino	442
CZ151IWHWDI	Torino	442
CZ151IBBMDI	Torino	442
CZ151IBBWDI	Torino	442
CZ151IIMGMDI	Torino	442
CZ151IIMGWDI	Torino	442
CZ151ILUMDI	Torino	442
CZ151ILUWDI	Torino	442
CZ151IGBMDI	Torino	442
CZ151IGBWDI	Torino	442
CZ151IBEMDI	Torino	442
CZ151IBEWDI	Torino	442
CZ152DBBMDI	Gomito	366
CZ152DBBWDI	Gomito	366
CZ152DCTMDI	Gomito	366
CZ152DCTWDI	Gomito	366
CZ152DWWMDI	Gomito	366
CZ152DWWWDI	Gomito	366
CZ153DBBMWF	Colonna	364
CZ153DBBWWF	Colonna	364
CZ153DCTMWF	Colonna	364
CZ153DCTWWF	Colonna	364
CZ153DWWMWF	Colonna	364
CZ153DWWWWF	Colonna	364
CZ155DBBMWF	Colonna	365
CZ155DBBWWF	Colonna	365
CZ155DCTMWF	Colonna	365
CZ155DCTWWF	Colonna	365
CZ155DWWMWF	Colonna	365
CZ155DWWWWF	Colonna	365
CZ156DBBMWF	Colonna	365
CZ156DBBWWF	Colonna	365
CZ156DCTMWF	Colonna	365
CZ156DCTWWF	Colonna	365
CZ156DWWMWF	Colonna	365
CZ156DWWWWF	Colonna	365
CZ157FBBMDI	Colonna	367
CZ157FBBWDI	Colonna	367
CZ157FCTMDI	Colonna	367
CZ157FCTWDI	Colonna	367
CZ157FWWMDI	Colonna	367
CZ157FWWWDI	Colonna	367
CZ158CBBMDI	Fronda	355
CZ158CBBMDW	Fronda	355
CZ158CMTMDI	Fronda	355
CZ158CMTMDW	Fronda	355
CZ158CWHMDI	Fronda	355
CZ158CWHMDW	Fronda	355
CZ159CBBMDI	Fronda	355
CZ159CBBMDW	Fronda	355
CZ159CMTMDI	Fronda	355
CZ159CMTMDW	Fronda	355
CZ159CWHMDI	Fronda	355
CZ159CWHMDW	Fronda	355
CZ160CBBMDI	Fronda	355
CZ160CBBMDW	Fronda	355
CZ160CMTMDI	Fronda	355
CZ160CMTMDW	Fronda	355
CZ160CWHMDI	Fronda	355
CZ160CWHMDW	Fronda	355

CODE	PRODUCT	PP
KIT0026	Phase-cut dimmer	339, 340, 341, 342, 343, 346, 348, 354, 356, 370, 374, 376, 380, 381, 382, 384, 396, 398, 399, 400, 402, 406, 407, 408, 410, 413, 424, 426, 427, 432
KIT0035	2Nights gobo filter	455
KIT0036	2Nights gobo filter	455
KIT0042	Tablet fixing bracket	433
KIT0043	Tablet fixing bracket	433
KIT0044	Tablet fixing bracket	433, 434
KIT0045	Tablet fixing bracket	433
KIT0046	Tablet fixing bracket	434
KIT0047	Tablet fixing bracket	434
KIT0055	2Nights gobo filter	455
KIT0056	2Nights gobo filter	455
KIT0057	2Nights gobo filter	455
KIT0058	2Nights gobo filter	455
KIT0079	Casambi DALI dimmer	330, 336, 342, 343, 346, 347, 348, 354, 355, 356, 357, 374, 375, 388, 389, 400, 401, 402, 403, 410, 412, 413, 416, 417, 418, 428, 444
KIT0080	Casambi Phase-cut dimmer	339, 340, 341, 342, 343, 346, 348, 354, 356, 370, 374, 376, 380, 381, 382, 384, 396, 398, 399, 400, 402, 406, 407, 408, 410, 413, 424, 426, 427, 432
KIT0111	Goletta modular kit	362
KIT81	Tablet fixing bracket	433
KIT82	Tablet fixing bracket	433
KIT83	Tablet fixing bracket	433, 434
KIT84	Tablet fixing bracket	433

Painted Plain Colours

Pure White
RAL 9016 polished

White
RAL 9003 polished

White
RAL 9003 textured

White
RAL 9003 matt

Off-White
RAL 9010 polished

Off-White
RAL 9010 textured

Limestone
RAL 9002 polished

Ivory
RAL 1015 polished

Toffee
RAL 1001 polished

Mushroom
RAL 1019 polished

Mushroom
RAL 1019 textured

Signal Yellow
RAL 1003 polished

Peach
RAL 3012 textured

Orange
RAL 2002 polished

Iconic Red
RAL 3020 polished

Red
RAL 3000 polished

Rubin
RAL 3003 polished

Bordeaux
RAL 3005 polished

Mint Green
RAL 6029 polished

Emerald
RAL 6024 polished

Green
RAL 6002 polished

Dusty Blue
RAL 5024 polished

Deep Blue
RAL 5011 polished

Deep Blue
RAL 5011 textured

Petrol
RAL 6004 polished

Petrol
RAL 6004 textured

Grey
RAL 7012 polished

Grey
RAL 7012 textured

Chocolate
RAL 8019 textured

Black
RAL 9005 polished

Black
RAL 9005 textured

Black
RAL 9005 matt

Tactile/Material Finishes and Diffuser/Lampshade Finishes

Polished Aluminum

Brushed Aluminum

Anodized Aluminum

Anodized Black Aluminum

Anodized Smoke Grey

Anodized Brushed Gold

Chrome
Galvanic

Brushed Nickel
Galvanic

Polished Black Nickel
Galvanic

Satin Black Nickel
Painted

Polished Gold
Galvanic

Satin Gold
Galvanic

Polished Copper
Galvanic

Brushed Bronze
Painted

Polished Dark Bronze
Painted

Carrara Marble

Brick Red Silicon

Black Silicon

Transparent PMMA
with OptiLight™

White Polycarbonate

White Polyurethane

Black Polyurethane

White Glass

Smoked Glass

Gold Glass

Rose Glass

Transparent Glass

EN The colors shown are indicative and may differ from the actual product.
IT I colori riportati sono indicativi e possono differire dal prodotto reale.
FR Les couleurs indiquées sont données à titre indicatif et peuvent différer du produit réel.

DE Die dargestellten Farben sind unverbindlich und können vom tatsächlichen Produkt abweichen.
ES Los colores mostrados son orientativos y pueden diferir del producto real.

How to read symbols and data

- Ceiling mounting
- Ceiling or wall mounting
- Wall mounting
- On the ground
- On the table
- IP20 — Ingress Protection rating (IEC 60529)
- Class I IEC protection class
- Class II IEC protection class
- Installation hole for recessed mounting
- Power supply cable included
- Driver included
- DALI — DALI
- DALI PUSH — DALI / Push DIM
- Push DIM — Push DIM
- PHASE-CUT — Phase-cut
- touch — Touch dimmer
- Touchless dimmer
- Magnetic connection
- Directional light beam
- Pendant diffused emission
- Pendant single emission
- Pendant double emission
- Surface (ceiling) diffused emission
- Surface (ceiling) direct emission
- Surface (ceiling) indirect emission
- Surface (wall) diffused emission
- Surface (wall) upward emission
- Surface (wall) downward emission
- Surface (wall) double emission
- Surface (wall) directional emission
- Floor diffused emission
- Floor indirect emission
- Floor direct emission
- Floor double emission
- Table diffused emission
- Table direct emission
- Table double emission

Code	Finish	Source	Input	Dimming	CCT (K)	Lm D	CRI	IP	Optic
Product code	Product finish	Lighting source	Voltage input	Dimming protocol	Color temperature	Delivered lumens	Color rendering index	Ingress protection rating	Product optic

EN The lumens indicated refer to the real luminous flux.
The connection diagrams for electronics articles are included in the technical documentation.

IT I lumen indicati si riferiscono al flusso luminoso reale.
Gli schemi di collegamento per gli articoli dell'elettronica sono disponibili all'interno della documentazione tecnica.

FR Les lumens indiqués se réfèrent au flux lumineux réel.
Les schémas de branchement pour les articles électroniques sont disponibles à l'intérieur de la documentation technique.

DE Die angegebenen Lumen beziehen sich auf den tatsächlichen Lichtstrom. Die Anschlusspläne der elektronischen Artikel sind in der technischen Dokumentation enthalten.

ES Los lúmenes indicados se refieren al flujo luminoso real.
Los esquemas de conexión para los artículos de la electrónica están disponibles dentro de la documentación técnica.

Terms and conditions

EN "Stilnovo by Linea Light Group" offers a 5-year warranty on its products against manufacturing defects, subject to filling in the activation form available at www.stilnovo.com. In the absence of activation, the statutory warranty remains valid. All power supply, wiring and accessories used for product installation shall be original "Stilnovo by Linea Light Group" parts or approved by the company. The warranty will become void if non original or non approved parts are used. For more information, please visit our website www.stilnovo.com. "Stilnovo by Linea Light Group" reserves the right, without any advance notice, to change the characteristics of their products, as well as the availability of the same at any time. No product, relative technical data, illustrations and information in the catalogue are binding for "Stilnovo by Linea Light Group". "Stilnovo by Linea Light Group" will not be held liable for any illustration, text and/or translation errors. More product characteristics are contained in the relative technical data sheets and instruction sheets. This catalogue is protected by copyright (law 22/04/1941 No. 633 and law 14/12/1942 No. 1485: this prohibits any reproduction, total or even partial).
All values indicated in the catalogue are measured values. There is a +/- 10% tolerance for the flow, CCT and power data.

IT "Stilnovo by Linea Light Group" offre una garanzia di 5 anni sui propri prodotti per vizi di fabbricazione previa compilazione dell'apposito modulo di attivazione, disponibile sul sito www.stilnovo.com. In mancanza di attivazione rimane valida la garanzia prevista per legge. I prodotti devono essere installati tassativamente con alimentazioni, cablaggi e accessori originali di "Stilnovo by Linea Light Group", o eventualmente approvati dall'azienda. L'utilizzo di accessori non originali, o non approvati, determina il decadimento di ogni garanzia sul prodotto. Per ulteriori informazioni, consultare il sito www.stilnovo.com. "Stilnovo by Linea Light Group" si riserva il diritto, senza alcun preavviso di modificare le caratteristiche dei propri prodotti come la disponibilità degli stessi in qualunque momento. Tutti i prodotti, relativi dati tecnici, illustrazioni e informazioni presenti sul catalogo non sono vincolanti per "Stilnovo by Linea Light Group". "Stilnovo by Linea Light Group" non risponderà di eventuali errori illustrativi, testuali e/o di traduzione.
Ulteriori caratteristiche dei prodotti sono contenute nelle relative schede tecniche e fogli istruzione. Il presente catalogo è tutelato dalla legge sui diritti d'autore (legge 22/04/1941 n. 633 e della legge 14/12/1942 n. 1485: di esso è proibita ogni riproduzione totale o anche parziale).
Tutti i valori riportati a catalogo sono valori di misurazione. I dati di flusso, CCT e potenza sono passibili di tolleranze di +/- 10 %.

FR "Stilnovo by Linea Light Group" offre une garantie de 5 ans sur ses produits pour vice de fabrication à condition d'avoir préalablement rempli le formulaire d'activation correspondant, disponible sur le site www.stilnovo.com. En cas de non-activation, la garantie prévue par la loi reste valable.
Les produits doivent impérativement être installés avec des alimentations, des câblages et des accessoires "Stilnovo by Linea Light Group", ou qui ont été approuvés par l'entreprise. L'utilisation d'accessoires non d'origine, ou non approuvés, entraîne la déchéance de toute garantie sur le produit. Pour tout renseignement complémentaire, consulter le site www.stilnovo.com. "Stilnovo by Linea Light Group" se réserve le droit, à tout moment et sans préavis, de modifier les caractéristiques de ses produits et leur disponibilité. Tous les produits, données techniques, illustrations et informations du catalogue ne sont pas contractuels pour "Stilnovo by Linea Light Group". "Stilnovo by Linea Light Group" ne pourra être tenu responsable des éventuelles erreurs d'illustration, de texte et/ou de traduction. Les autres caractéristiques des produits sont décrites dans les fiches techniques et les notices d'instructions correspondantes.
Ce catalogue est protégé par la loi sur les droits d'auteur (loi 22/04/1941 n° 633 et loi 14/12/1942 n° 1485 : toute reproduction totale ou partielle du présent catalogue est interdite).
Toutes les valeurs indiquées dans ce catalogue sont des valeurs mesurées. Les données de flux, de CCT et de puissance sont soumises à des tolérances de +/- 10 %.

DE Die Firma "Stilnovo by Linea Light Group" gibt eine Garantie von 5 Jahren auf ihre Produkte in Bezug auf Produktionsfehler. Voraussetzung für die Inanspruchnahme der Garantie ist das Ausfüllen des entsprechenden Formulars zur Aktivierung der Garantie, das auf der Webseite www.stilnovo. com verfügbar ist. Wenn keine Aktivierung der Garantie erfolgt, gilt die gesetzlich vorgeschriebene Garantie.
Die Produkte müssen obligatorisch mit Originalstromversorgung, Originalkabeln und Originalzubehör der "Stilnovo by Linea Light Group" oder mit Teilen, die von der Linea Light Group ausdrücklich empfohlen sind, installiert werden. Die Verwendung von nicht originalem oder nicht vom Hersteller empfohlenem Zubehör
führt zu einem sofortigen Verfall vom Garantieanspruch für das Produkt.
Für weitere Informationen, besuchen Sie bitte www.stilnovo.com
"Stilnovo by Linea Light Group" behält sich das Recht vor, ohne jegliche Vorankündigung die Merkmale der eigenen Produkte und deren Verfügbarkeit jederzeit zu ändern. Alle Produkte, die technischen Daten, die Darstellungen und die Informationen im Katalog sind nicht für "Stilnovo by Linea Light Group" bindend. "Stilnovo by Linea Light Group" haften nicht für etwaige Fehler in der Darstellung, im Texten und/oder in der Übersetzung. Weitere Merkmale der Produkte sind in den jeweiligen technischen Datenblät- tern und in den Anleitungen enthalten. Dieser Katalog wird vom Urheberrecht geschützt (Gesetz Nr. 633 vom 22/04/1941 und Gesetz Nr. 1485 vom 14/12/1942: Die völlig oder auch nur teilweise Vervielfältigung ist verboten). Alle im Katalog angeführten Angaben sind Messwerte. Für die Fluss-, CCT- und Leistungsdaten gelten Toleranz- wertevon+/-10%.

ES "Stilnovo by Linea Light Group" ofrece una garantía de 5 años para sus productos por vicios de fabricación previa cumplimentación del formulario correspondiente de activación, disponible en el sitio www.stilnovo.com. En caso de no activación, la garantía es la contemplada por la ley.
Los productos se han de instalar obligatoriamente con alimentaciones, cableados y accesorios originales de "Stilnovo by Linea Light Group" o, de otra forma, deben ser aprobados por la empresa misma. El uso de accesorios no originales, o no aprobados, anula todas las garantías del producto. Para más información, visite www.stilnovo.com.
"Stilnovo by Linea Light Group" se reserva el derecho de modificar, en cualquier momento sin previo aviso, las características de sus productos, así como la disponibilidad de los mismos. Todos los productos, sus datos técnicos, las ilustraciones y la información del catálogo no son vinculantes para "Stilnovo by Linea Light Group".
"Stilnovo by Linea Light Group" no se hace responsable de los errores de las ilustraciones, los textos y/o la traducción. Pueden encontrarse características adicionales de los productos en las correspondientes hojas de datos e instrucciones. Este catálogo está protegido por la ley de derechos de autor (ley 22/04/1941 nº 633 y ley 14/12/1942 nº 1485: está prohibida toda reproducción total o parcial de este catálogo).
Todos los valores reflejados en el catálogo son valores medidos. Los datos de flujo, CCT y potencia están sujetos a tolerancias de +/- 10 %.

LAMP-CONCEPT.CH

Stilnovo a brand of Linea Light Group

ADMINISTRATIVE HQ
Via Europa, 14
31028 Vazzola - TV
Italy

OPERATIVE HQ
Via della Fornace, 59
31023 Castelminio di Resana - TV
Italy

IT01220530263

T +39 0423 7868
E info@stilnovo.com

stilnovo.com

April 2026 edition
© 2026 Linea Light Group
All rights reserved

Art Direction: Russo Sgarbossa
Graphic Design: Russo Sgarbossa
Photography: Marco Zanin, Consiglio Manni, Matteo Lavazza Seranto, Gianni Antoniali - IKON, Studio Pointer, Quasarfoto
Styling: Russo Sgarbossa
Printed by: Grafiche Antiga

2026

Headquarters	**c/o Linea Light Srl**	**Via Della Fornace 59 31023 Castelminio di Resana TV Italia**	**T +39 0423 7868 E info@stilnovo.com**
Milano	**Linea Light HUB Milano**	**Via Giovanni Boccaccio, 15/A 20121, Milano Italia**	**T +39 02 36750915 E milano@linealight.com**
Roma	**c/o Linea Light Roma**	**Via La Spezia, 34 00182 Roma Italia**	**T +39 06 68589134 E roma@linealight.com**
China	**People And Objects Co. Ltd**	**Room 118 BLDG. 20 No. 1-42 – Lane 83 – Hongxiang North RD, Pudong New District – Shanghai, 201313 China**	**T Mr. Gianni del Vecchio: +86.131.66090185 T Ms. Yuxuan Ye: +86.136.15814387 E peopleandobjects@outlook.com**
United States of America	**c/o Inter-lux, Inc.**	**3741 Commerce Dr Suite 306-308, Halethorpe, MD 21227 USA**	**T +1 410 381 1497 E answers@inter-lux.com**
United Arab Emirates	**c/o Linea Light GCC**	**P.O. Box 125902 – Jumeirah Lake Towers JBC2 35th Floor Office 02 Dubai UAE**	**T +971 4 4218275 E info@linealight.ae**
France	**c/o Dharma Design**	**20 rue Lacaze 75014 Paris France**	**T +33 01 44 78 04 14 M +33 07 49 14 87 71 E service@dharmadesign.fr**
Germany	**c/o Linea Light Deutschland**	**Aktienstraße 214 45473 Mülheim an der Ruhr Germany**	**T +49 208 299979-0 E service@linealight.de**
Greece	**c/o Linea Light Greece**	**538 Vouliagmenis Ave., 17456 Alimos Athens**	**T +30 210 9940559 E g.virinis@linealight.com**
Qatar		**Al Muntaza, C Ring Road, Andalus petrol station Building n.1, office 3 Po Box: 30459 Doha, Qatar**	**T +974 44785354 E naim.eldamaa@linealight.com**
United Kingdom	**c/o Linea Light UK Ltd**	**52 Upper Street N10QH Islington London United Kingdom**	**T +44 203 6371983 E info@linealight-uk.com**
Singapore	**c/o Linea Light Singapore PTE. LTD.**	**21 Kaki Bukit Place, 5th Fl. 416199 Singapore Singapore**	**T +65 6908 5758 E info.sg@linealight.com**
Spain	**c/o Linea Light Spain S.L.**	**C/ Longares, 48 28022 Madrid Spagna**	**T +34 912534773 E gestion@linealight.com**



LAMP CONCEPT

LIGHTING

Avenue du Grand-Champsec 12
CH-1950 Sion

+41 27 565 59 00
Info@lamp-concept.ch
www.lamp-concept.ch